CHAMPION
GLOBAL POWER EQUIPMENT™-MC

OPERATOR'S MANUAL

MODEL #CPG4000DHY-UK
3600W WIRELESS REMOTE START OPEN FRAME INVERTER

REGISTER YOUR PRODUCT ONLINE
at **www.championpowerequipment.co.uk**



OIL
NO OIL SUPPLIED IN UNIT
Add 10w30 Oil Before Use

Original Instructions

TAKE IT OUTSIDE™
TAKEYOURGENERATOROUTSIDE.COM

+44(0)-1942-715-407
or visit **www.championpowerequipment.co.uk**

SAVE THESE INSTRUCTIONS. This manual contains important safety precautions which should be read and understood before operating the product. Failure to do so could result in serious injury. This manual should remain with the product.

Specifications, descriptions and illustrations in this manual are as accurate as known at the time of publication, but are subject to change without notice.

REV 20220114

TAKE IT OUTSIDE™

CARBON MONOXIDE KILLS

CARBON MONOXIDE SAFETY: THE BIG PICTURE

As the only safe way to use a portable generator, taking your generator outside is absolutely mandatory to keep your family safe from carbon monoxide. But there's even more you can do. By educating yourself about all carbon monoxide risks, you'll be better prepared to protect your family from this colorless, oderless threat.



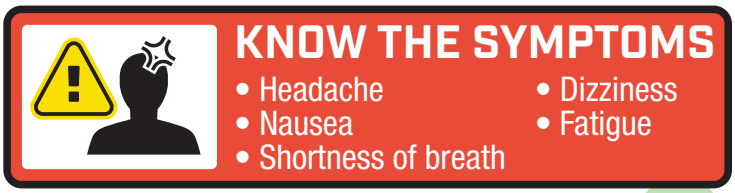

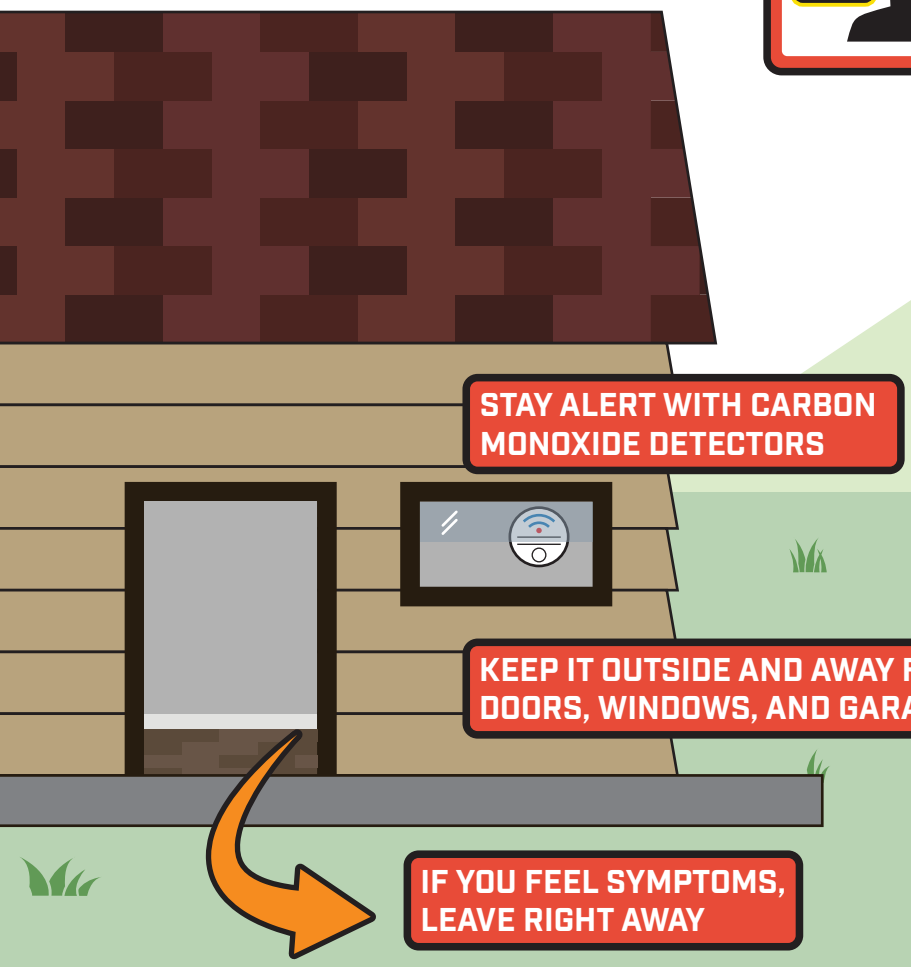

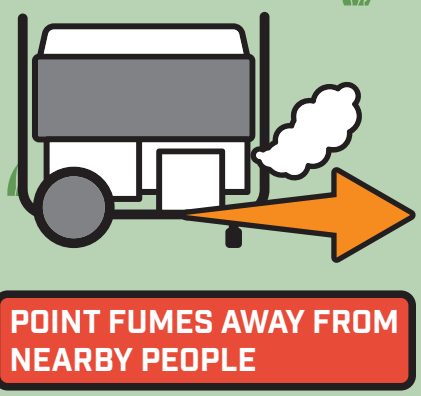

www.TakeYourGeneratorOutside.com

TABLE OF CONTENTS

Introduction 4

Safety Definitions 4

Important Safety Instructions 5

- Fuel Safety 7
- Safety and Dataplate Labels 8
- Safety Symbols 9
- Operation Symbols 10
- Quick Start Label Symbols 11

Controls and Features 12

- Generator 12
- Control Panel 13
- Wireless Remote Control 14
- Parts Included 15

Assembly 16

- Unpacking 16
- Install the Wheel Kit 16
- Connect the Battery 16
- Add Fuel 18
- Grounding 19

Operation 19

- Generator Location 19
- Surge Protection 20
- Wireless Set Button 20
- Starting the Engine 21
- Battery 22
- Do Not Overload Generator 23
- Eco (Economy) Mode 23
- Stopping the Engine 23
- Moving the Generator 24
- Maintenance 25
- Cleaning the Generator 25
- Changing the Engine Oil 25
- Cleaning and Adjusting the Spark Plug 25
- Cleaning the Air Filter 26
- Cleaning the Spark Arrestor 26
- Adjusting the Governor 26
- Generator Battery 26
- Remote Key Fob Battery 27
- Maintenance Schedule 27

Storage 28

- Short Term Storage (up to 30 days) 28
- Mid Term Storage (30 days – 1 year) 28
- Long Term Storage (over 1 year) 28
- Removing from Storage 29

Specifications 30

- Generator Specifications 30
- Engine Specifications 30
- Oil Specifications(Oil not included) 30
- Fuel Specifications 30
- Battery Specifications 30
- Temperature Specifications 30
- Parts Diagram 31
- Parts List 32
- Engine Parts Diagram 34
- Engine Parts List 35

Troubleshooting 38

WARRANTY* 40

- Warranty Qualifications 40
- Repair/Replacement Warranty 40
- Do Not Return The Unit To The Place Of Purchase 40
- Warranty Exclusions 40
- Other Exclusions 40
- Limits of Implied Warranty and Consequential Damage 40
- Contact Information 40

INTRODUCTION

Congratulations on your purchase of a Champion Power Equipment (CPE) product. CPE designs, builds, and supports all of our products to strict specifications and guidelines. With proper product knowledge, safe use, and regular maintenance, this product should bring years of satisfying service.

Every effort has been made to ensure the accuracy and completeness of the information in this manual at the time of publication, and we reserve the right to change, alter and/or improve the product and this document at any time without prior notice.

CPE highly values how our products are designed, manufactured, operated, and serviced as well as providing safety to the operator and those around the generator. Therefore, it is IMPORTANT to review this product manual and other product materials thoroughly and be fully aware and knowledgeable of the assembly, operation, dangers and maintenance of the product before use. Fully familiarize yourself, and make sure others who plan on operating the product fully familiarize themselves too, with the proper safety and operation procedures before each use. Please always exercise common sense and always err on the side of caution when operating the product to ensure no accident, property damage, or injury occurs. We want you to continue to use and be satisfied with your CPE product for years to come.

When contacting CPE about parts and/or service, you will need to supply the complete model and serial numbers of your product. Transcribe the information found on your product's nameplate label to the table below

CPE TECHNICAL SUPPORT TEAM
+44(0)-1942-715-407
MODEL NUMBER
CPG4000DHY-UK
SERIAL NUMBER
DATE OF PURCHASE
PURCHASE LOCATION

SAFETY DEFINITIONS

The purpose of safety symbols is to attract your attention to possible dangers. The safety symbols, and their explanations, deserve your careful attention and understanding. The safety warnings do not by themselves eliminate any danger. The instructions or warnings they give are not substitutes for proper accident prevention measures.

⚠ DANGER

DANGER indicates a hazardous situation which, if not avoided, will result in death or serious injury.

⚠ WARNING

WARNING indicates a hazardous situation which, if not avoided, could result in death or serious injury.

⚠ CAUTION

CAUTION indicates a hazardous situation which, if not avoided, could result in minor or moderate injury.

NOTICE

NOTICE indicates information considered important, but not hazard-related (e.g., messages relating to property damage).

IMPORTANT SAFETY INSTRUCTIONS

⚠ DANGER

Generator exhaust contains carbon monoxide, a colorless, odorless, poisonous gas. Breathing carbon monoxide will cause nausea, dizziness, fainting or death. If you start to feel dizzy or weak, get to fresh air immediately.

ONLY OPERATE GENERATOR OUTDOORS ONLY IN A WELL VENTILATED AREA AND POINT EXHAUST AWAY.

DO NOT operate the generator inside any building, including garages, any vehicles, basements, crawlspaces and sheds, enclosure or compartment, including the generator compartment of a recreational vehicle.

DO NOT allow exhaust fumes to enter a confined area through windows, doors, vents or other openings.

⚠ DANGER

Using a generator indoors **CAN KILL YOU IN MINUTES**. Generator exhaust contains carbon monoxide. This is a poison you cannot see or smell.

NEVER use inside house, out building, sheds, garages, vehicles or confined spaces, **EVEN IF** if doors and windows are open and well ventilated.

ONLY use **OUTSIDE** and far away from windows, doors, and vents.

NEVER use generator with muffler extension or added extraction systems this will invalidate your warranty.

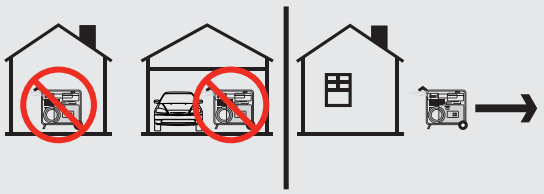

Install battery-operated carbon monoxide alarms or plug-in carbon monoxide alarms with battery back-up according to the manufacturer's instructions.

⚠ WARNING

Although the generator contains a spark arrester, maintain a minimum distance of 5 ft. (1.5 m) from dry vegetation and any surrounding areas to prevent fires.

⚠ DANGER

Operate equipment with guards in place.

Rotating parts can entangle hands, feet, hair, clothing and/or accessories. Traumatic amputation or severe laceration can result.

Keep hands and feet away from rotating parts.

Tie up long hair and remove jewelry.

DO NOT wear loose-fitting clothing, dangling drawstrings or items that could become caught.

⚠ DANGER

Generator produces powerful voltage.

DO NOT touch bare wires or receptacles.

DO NOT use electrical cords that are worn, damaged or frayed. Use only Champion electrical cords for proper application.

DO NOT operate generator in wet weather.

DO NOT allow children under the age of 18 or unqualified persons to operate or service the generator.

Use a ground fault circuit interrupter (GFCI) in damp areas and areas containing conductive material such as metal decking.

Connection to your home's electrical system requires a listed 30A transfer switch installed by a licensed electrician and approved by the local authority having jurisdiction. The connection must isolate the generator from the utility power and must comply with all applicable laws and electrical codes.

⚠ WARNING

Do not use generator for medical and life support uses.

In case of emergency, call 911 immediately.

NEVER use this product to power life support devices or life support appliances.

NEVER use this product to power medical devices or medical appliances.

Inform your electricity provider immediately if you or anyone in your household depends on electrical equipment to live.

Inform your electrical provider immediately if a loss of power would cause you or anyone in your household to experience a medical emergency.

⚠ WARNING

Spark from removed spark plug wire can result in fire or electrical shock.

When servicing the generator:

Disconnect the spark plug wire and place it where it cannot contact the plug or any other metal object.

DO NOT check for spark with the plug removed.

Use only approved spark plug testers.

⚠ WARNING

Running engines produce heat. Severe burns can occur on contact. Combustible material can catch fire on contact.

DO NOT touch any hot surfaces on the generator including muffler system when running or stopped for less than 1 hour.

Avoid contact with hot exhaust gases.

Allow equipment to cool before touching.

Never use muffler extensions.

Maintain at least 3 ft. (91.4 cm) of clearance on all sides to ensure adequate cooling.

Maintain at least 5 ft. (1.5 m) of clearance from combustible materials.

⚠ WARNING

Rapid retraction of the recoil cord will pull hand and arm towards the engine faster than you can let go. Broken bones, fractures, bruises or sprains could result. Unintentional startup can result in entanglement, traumatic amputation or laceration.

When starting engine, pull the recoil cord slowly until resistance is felt and then pull rapidly to avoid kickback.

DO NOT start or stop the engine with electrical devices plugged in and turned on.

⚠ WARNING

This product contains a sealed battery. Never attempt to open it.

In the event the sealed battery is damaged and leaking fluid it should be disposed of immediately and replaced.

All batteries supplied are covered by 1 year warranty only and are not part of the 3 year extended warranty.

If battery fluid is exposed to hands, eyes or face, wash and rinse with fresh water. If this doesn't resolve the issue, immediate medical attention is required.

⚠ WARNING

This product contains a button battery. If swallowed, it could cause severe injury or death in just 2 hours. Seek medical attention immediately.

⚠ CAUTION

Exceeding the generator's running capacity can damage the generator and/or electrical devices connected to it.

DO NOT overload the generator.

DO NOT tamper with the governed speed.

DO NOT modify the generator in any way.

The **Starting Watts** listed on your generator is the wattage the generator can output for an average of 6 seconds (Inverter) or 10 minutes (Open Frame Type).

The **Maximum Watts** is the MAX watts output the generator can run at – however it is not recommended to run your generator at the maximum watts for periods more than average 5 minutes (Inverter) and 60 minutes (Open Frame Type).

Once this period is over, and if the wattage has not reduced, the Overload Protection will activate and the generator will trip.

⚠ CAUTION

Improper treatment or use of the generator can damage it, shorten its life or void the warranty.

Use the generator only for intended uses.

Operate only on level surfaces.

DO NOT expose generator to excessive moisture, dust, or dirt.

DO NOT allow any material to block the cooling slots.

If connected devices overheat, turn them off and disconnect them from the generator.

DO NOT use the generator if:

- Electrical output is lost
- Equipment sparks, smokes or emits flames
- Equipment vibrates excessively
- Muffler extensions or extraction systems need to be added

Fuel Safety

⚠ DANGER

GASOLINE AND GASOLINE VAPORS ARE HIGHLY FLAMMABLE AND EXPLOSIVE.

Fire or explosion can cause severe burns or death.

Gasoline and gasoline vapors:

- Gasoline is highly flammable and explosive.
- Gasoline can cause a fire or explosion if ignited.
- Gasoline is a liquid fuel but it's vapors can ignite.
- Gasoline is a skin irritant and needs to be cleaned up immediately if spilled on skin or clothes.
- Gasoline has a distinctive odor, this will help detect potential leaks quickly.
- Gasoline expands or contracts with ambient temperatures. Never fill the gasoline tank to full capacity, as gasoline needs room to expand when temperatures rise.
- In the case of any petroleum gasoline fire, flames should never be extinguished unless the fuel supply valve can be turned OFF. By not doing so, if a fire is extinguished and the supply of fuel is not turned OFF, an explosion hazard could be created.

When adding or removing gasoline:

DO NOT use any naked flames including lighters, cigars, matches or cigarettes when attempting to replace fuel.

Turn the generator off and let cool for at least ten minutes before removing the gasoline cap. Always loosen the cap slowly to relieve pressure in the tank.

Only fill or drain gasoline outdoors in a well-ventilated area.

DO NOT pump gasoline directly into the generator at the gas station. Always use an approved container to transfer the fuel to the generator.

DO NOT overfill the gasoline tank.

DO NOT attempt to remove/refill fuel in any confined spaces, vehicles or building.

If any petrol or flammable liquid spills outside the generator tank it MUST be cleaned up first before starting the generator

Always keep gasoline away from sparks, open flames, pilot lights, heat and other sources of ignition.

When starting the generator:

DO NOT attempt to start a damaged generator.

Always check that the gasoline cap, air filter, spark plug, fuel lines and exhaust system are properly in place.

Always allow spilled gasoline to evaporate fully before attempting to start the engine.

Always be certain that the generator is resting firmly on level ground.

When operating the generator:

DO NOT move or tip the generator during operation.

When transporting or servicing the generator:

Always check that the fuel valve is in the OFF position and the gasoline tank is empty.

For LPG compatible models, check that the LPG cylinder is disconnected and stored securely away from the generator.

Remove/Disconnect spark plug or HT lead.

When storing the generator:

Store away from sparks, open flames, pilot lights, heat and other sources of ignition.

Do not store generator, gasoline or LPG cylinders near furnaces, water heaters, or any other appliances that produce heat or have automatic ignitions.

Do Not store generator with fuel left inside the tank, over time it will solidify and contaminate.

⚠ DANGER

NEVER place a gasoline container, gasoline tank, LPG cylinder or any combustible material in the path of the exhaust stream during operation of the engine.

⚠ WARNING

Never use a gasoline container, gasoline tank, or any other fuel item that is broken, cut, torn or damaged.

Safety and Dataplate Labels

These labels warn you of potential hazards that can cause serious injury. Read them carefully.

If a label comes off or becomes hard to read, contact Technical Support Team for possible replacement.

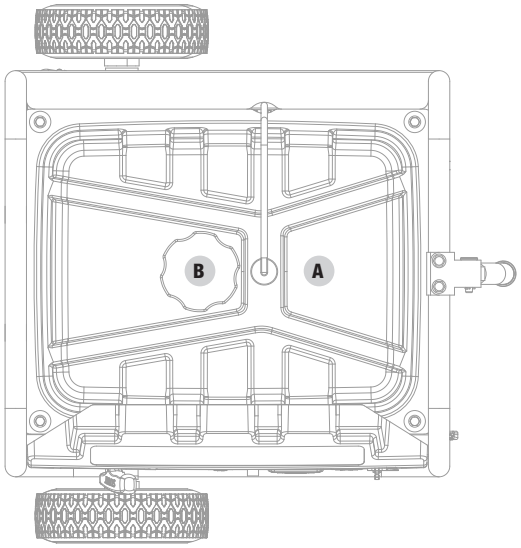

Top

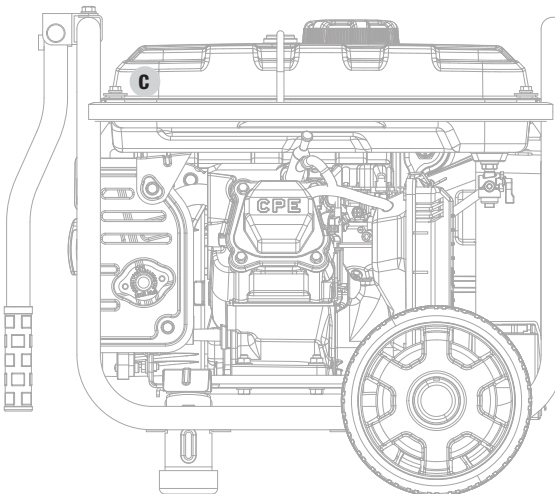

Back

	LABEL	DESCRIPTION
A	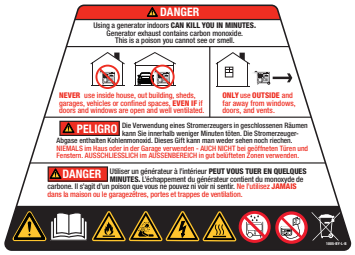	CO Danger/ Safety Icons
B		Fuel
C		Hot Surface

Safety Symbols

Some of the following symbols may be used on this product. Please study them and learn their meaning. Proper interpretation of these symbols will allow you to more safely operate the product.

SYMBOL	MEANING
	**Caution.**
	**Read The Operator's Instruction Manual Before Use.** To reduce the risk of injury, user must read and understand operator's manual before using this product.
	**Not For General Waste Disposal.**
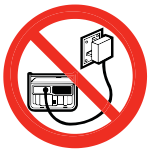	The generating set must not be connected to other power sources, such as the power company supply mains.
	**Electric Hazard.** Failure to use in dry conditions and to observe safe practices can result in electric shock. Improper connections to a building can allow current to backfeed into utility lines, creating an electrocution hazard. A transfer switch must be used when connecting to a building.
	**Fire Hazard.** Fuel and its vapors are extremely flammable and explosive. Fire or explosion can cause severe burns or death. Keep generator at least 5 feet (1.5m) from all objects to prevent combustion.
	**Risk Of Being Burnt.** To reduce the risk of injury or damage, avoid contact with any hot surface.
	**Carbon Monoxide(co) Danger.**
	**Wet Conditions Alert.** Do not expose to rain or use in damp locations except as follows: If you must operate in rain or damp locations, DO NOT operate without proper protection of the electrical components. Use of a safety canopy that is fire retardant and will provide proper air ventilation for the engines exhaust stream can be used. Keep all objects a minimum of 5 feet (1.5m) away from the generator at all times. Heat from the muffler surface and exhaust stream can ignite combustible materials.

Operation Symbols

Some of the following symbols may be used on this product. Please study them and learn their meaning. Proper interpretation of these symbols will allow you to more safely operate the product.

SYMBOL	MEANING
	**Start/Stop**
	**Wireless Pair button**
	**Overload Reset button**
	**Low Oil**
	**Economy Mode Button**
	**Choke Button**
	**12V Direct Current**
	**Circuit Breaker Reset: Push**

SYMBOL		MEANING
		**Neutral Floating.** Neutral circuit **IS NOT** electrically connected to the frame/ground of the generator.
		**Fuel/Gasoline Valve On/Off**

Quick Start Label Symbols

Some of the following symbols may be used on this product. Please study them and learn their meaning. Proper interpretation of these symbols will allow you to more safely operate the product.



Starting the Engine

⚠ DANGER

Position the generator outside as far away as possible from windows, doors, ventilation equipment and out buildings.

1. **Check oil level. (No oil supplied with unit)**
   Add recommended 10W30 NON synthetic oil on first use.
2. **Check gasoline level.**
   When adding gasoline, use a minimum octane rating of 85 and an ethanol content of 10% or less by volume.
3. Turn the fuel valve to **"ON"** position.
4. Press the START/STOP button once.
5. **Choke engine**
   Press the choke button.
6. Pull the recoil cord.
7. **Run engine**
   Press the choke button.
8. Plug in desired device.

Stopping the Engine

1. Turn off and unplug all connected electrical loads.
2. Press the START/STOP button once.
3. Turn the fuel valve to **"OFF"** position.

Wireless and Electric Start

See page 21 in "Operation" section.

CONTROLS AND FEATURES

Read this operator's manual before operating your generator. Familiarize yourself with the location and function of the controls and features. Save this manual for future reference.

Generator

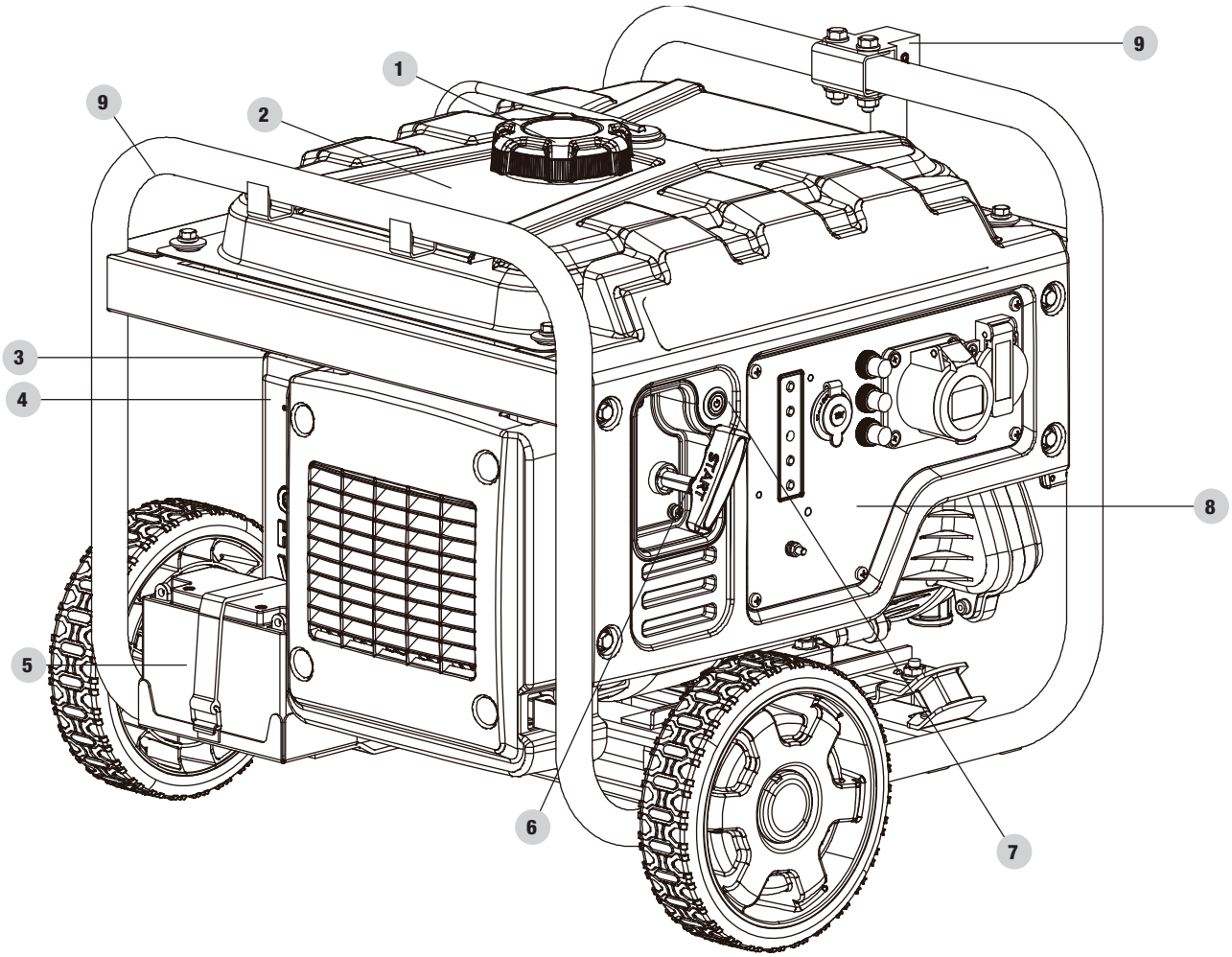

1. **Fuel Cap** – Remove to add fuel.
2. **Gasoline Tank** – 2.9 gal. (11 L)
3. **Air Filter** – Protects the engine by filtering dust and debris from the intake air
4. **Fuel Valve** – Used to turn fuel supply on and off to engine.
5. **Battery** – Provides 12V DC power the starting system.
6. **Recoil Starter** – Used to manually start the engine
7. **Power Button**
8. **Control Panel** – See "Control Panel" section.
9. **Carrying Handle(s)** – Used to lift or carry the unit.

Control Panel

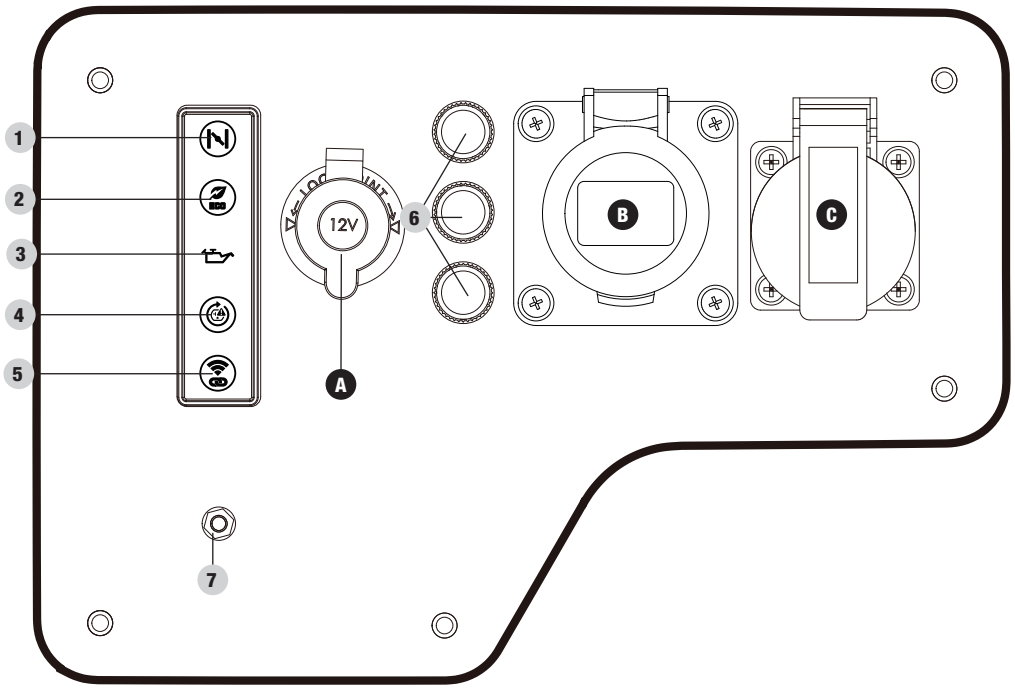

1. **Choke Button** – Used to start a cold engine.
   1a. Green – Choke is ON.
   1b. Off – Choke is OFF.
2. **Economy Mode Button** – Enables/disables automatic idle control.
   2a. Off – Economy Mode is OFF.
   2b. Green – Economy Mode is ON.
3. **Oil Warning Indicator Light** – When ON, engine will shut down and not run. Check oil level.
4. **AC Overload Reset Button** – Used to re-energize receptacles after overload fault.
   4a. Green – Systems Normal.
   4b. Red Constant – Overload Warning.
   4c. Red Flash – Overload Fault. Push to reset.
5. **Wireless Reset** – Used to reset or pair remote control(s).
   5a. Blue – Unit is paired with remote. Push to Reset.
   5b. Off – Unit is not paired with remote.
6. **Circuit Breakers (Push Reset)** – Protects the generator against electrical overloads.
7. **Ground Terminal** – Consult an electrician for local grounding regulations.

RECEPTACLES		
A		**12V DC, 8 Amp (Automotive)** May be used to supply electrical power for operation of 12 Volt DC, 8 Amp electrical loads.
B		**240V AC, 16A** May be used to supply electrical power for operation of 240 Volt AC, 16 Amp, single phase, 50 Hz electrical loads.
C		**240V AC, 13A** May be used to supply electrical power for operation of 240 Volt AC, 13 Amp, single phase, 50 Hz electrical loads.

⚠ WARNING

NEVER use both AC & DC together, this will damage generator and possible equipment.

One or the other MUST ONLY be used at a time.

Prolonged exposure to engine exhaust can cause serious injury or death.

While charging a device do no place on the exhaust side of the generator. Extreme heat caused by exhaust can damage the device, and cause a potential fire hazard.

Wireless Remote Control

This generator is equipped with a RED wireless remote control system for starting and stopping. The system consists of (4) main components:

1. Receiver Control Module (RCM)
2. Remote Control
3. Start/Stop button
4. Auto-Choke

The Remote Control functions are enabled when:

1. The START/STOP button is in “STANDBY” mode and flashes green once per second.

The Remote Control functions are disabled when the above condition is not met.

To start the generator wirelessly, press the “START” button on on the Remote Control one time to enter standby mode, indicated by the START/STOP button on control panel flashing green once per second. Press the “START” button on the Remote Control again to start the engine. The engine will attempt to start (6) times. The RCM controls the Auto-Choke during each attempt to start. If the generator does not start, call Champion Customer Care team for assistance at +44(0)1942-715-407.

To stop the generator wirelessly, press the “STOP” button on the Remote Control one time.

Remote Control Power Consumption

While the START/STOP button is in “STANDBY” mode and flashing green once per second, the RCM is active and waiting for a remote signal. This standby function requires a small amount of electrical current from the battery and will shut off automatically after 12 hours.

Pushing and holding the “STOP” button on the remote control for 5 seconds or pushing and holding the START/STOP button on the control panel for 5 seconds disables the standby function manually and the RCM will no longer consume any battery power or wait for remote signal. This is indicated by the START/STOP button no longer flashing.

Parts Included

Wheel Kit

- 8 in. (20.3 cm) Never Flat Wheel 2
- Wheel hub caps 2
- Roll Pin 2
- Large R-clip 2
- Support Leg w/Vibration Mounts 1
- Flange Bolt M8x16 (for Support Leg) 2
- Handle 1
- Flange Bolt M8x45 (for handle) 2
- Flange Lock Nut M8 2

Other

- Oil Funnel 1
- Dual Port USB Adapter (5V/2.4A) 1
- Battery Charging Cables 1
- Remote Key Fob 1

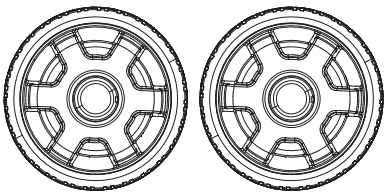

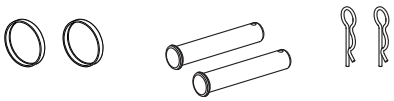

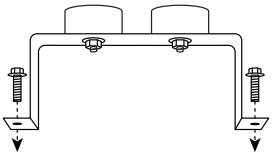

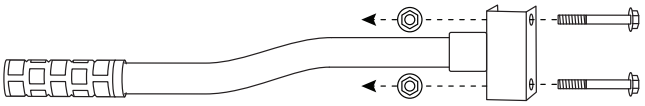

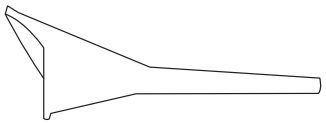

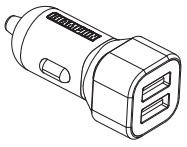

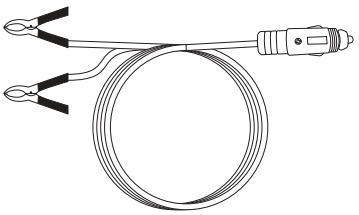



ASSEMBLY

Your generator requires some assembly. This item is shipped from our factory without oil. Recommend 10w30 Non synthetic oil & fuel (Petrol) needs to be added on first use before starting the engine.

If you have any questions regarding the assembly of your generator, call our Technical Support Team at +44(0)1942-715-407. Please have your serial number and model number available.

Unpacking

1. Set the shipping carton on a solid, flat surface.
2. Remove everything from the carton except the generator.
3. Carefully cut each corner of the box from top to bottom. Fold each side flat on the ground to provide a surface area to work with the generator.

Install the Wheel Kit

⚠ CAUTION

The wheel kit is not intended for over-the-road use.

Install the Wheels

1. Before adding fuel and oil, carefully tip the generator onto the control panel side.
2. Remove wheel hub cap (B) from wheel by inserting a small screwdriver into the slot provided and pry upward.
3. Slide the roll pin (C) through the wheel (A) from the outside.
4. Slide the roll pin through the mount point on the frame.
5. Insert r-clip (D) into hole at end of roll pin.
6. Re-install hub cap on wheel.
7. Repeat to attach the second wheel.

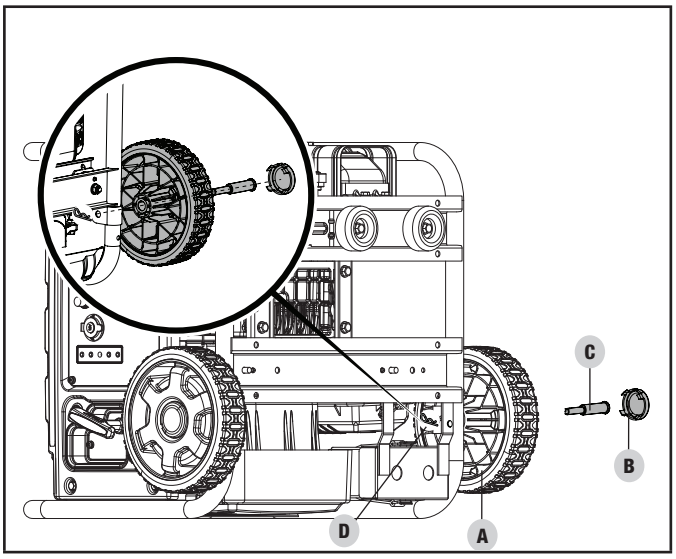

Install the Support Leg

1. Attach the support leg (E) to the generator frame with flange bolts (F).
2. Slowly tip the generator back down so that it rests on the Wheels and support leg.

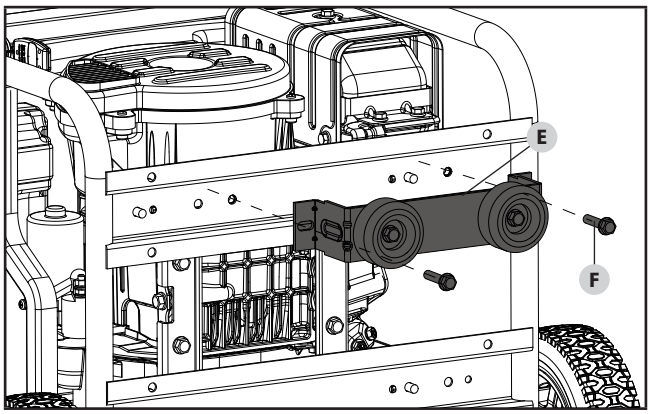

Install the Handle

3. Place the handle (G) over the mounting channel on the frame.
4. Secure the handle to the frame using the two flange bolts (H) (M8x45).
5. Place a flange lock nut (I) on the end of each bolt and fasten securely. DO NOT over tighten the flange lock nuts.

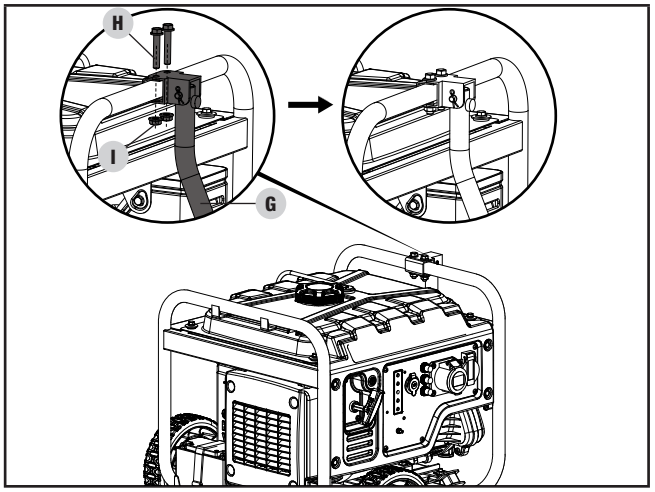

Connect the Battery

1. Cut cable tie on each side of battery connector.
2. Push two halves of battery connector together tightly.

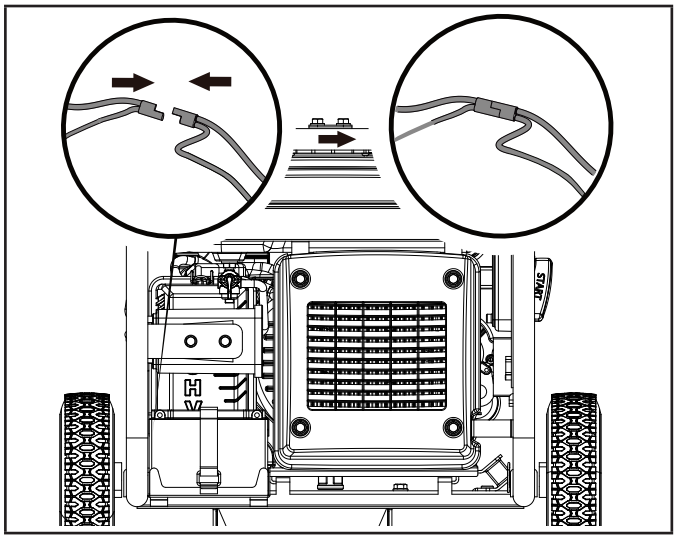

Add Engine Oil
No oil in engine, recommended 10w30 Non synthetic engine oil needs to be added.

⚠ CAUTION

DO NOT attempt to crank or start the engine before it has been properly filled with the recommended type 10w30 Non synthetic and amount of oil. Damage to the generator as a result of failing to follow these instructions will void your warranty.

NOTICE

The generator rotor has a sealed, pre-lubricated ball bearing that requires no additional lubrication for the life of the bearing.

NOTICE

The recommended oil type for typical use is **10W-30 oil**. However, using the listed conventional oils shown in the "Recommended Engine Oil Type" chart may be used for typical use including the first 5 hours of the break-in run time period of the engine.

If running generator in extreme temperatures, refer to the "Recommended Engine Oil Type" chart.

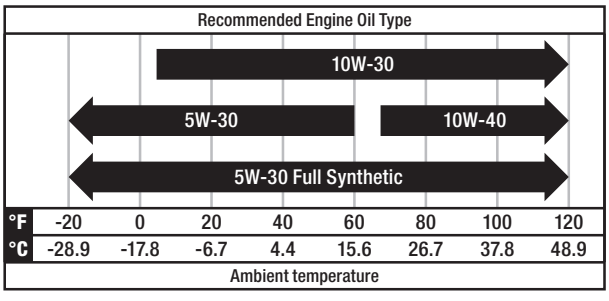

1. Place the generator on a flat, level surface.
2. Remove oil fill cap/dipstick to add oil.
3. Using a funnel, add up to 20.3 fl. oz. / 0.6 qt. (0.6 L) of oil (not included) and replace oil fill cap/dipstick. DO NOT OVERFILL.

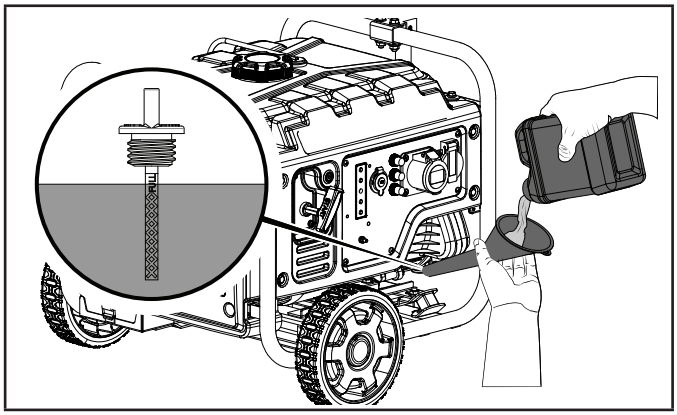

4. Check engine oil level at every use and add as needed.

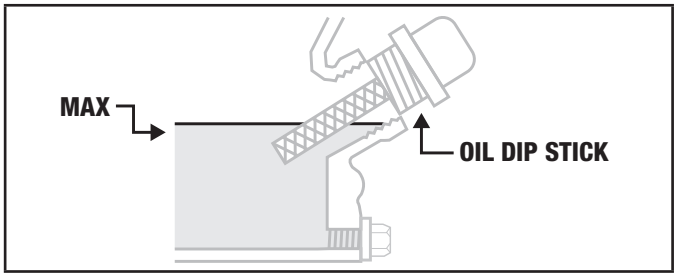

NOTICE

Check oil level often during the break-in period. Refer to the *Maintenance* section for recommended service intervals.

⚠ CAUTION

This engine is equipped with a low oil shut-off and will stop when the oil level in the crankcase falls below the threshold level.

⚠ CAUTION

As a good general rule of thumb the bottom 2 threads on the oil port is full, Always make sure the generator is level and never tip the generator to check oil levels.

NOTICE

The first 5 hours of run time are the break-in period for the unit. During the break in period stay at or below 50% of the running watt rating and vary the load occasionally to allow stator windings to heat and cool. Adjusting the load will also cause engine speed to vary slightly and help seat piston rings. After the 5 hour break-in period, change the oil.

NOTICE

Only synthetic oil may be used after the 5 hour initial break-in period. Using synthetic oil does not decrease the recommended oil change interval. Full synthetic 5W-30 oil will aid in starting in cold ambient < 41° F (5° C) temperatures.

Add Fuel

⚠ DANGER

Gasoline vapors are highly flammable and extremely explosive.

DO NOT light or smoke cigarettes. Fire or explosion can cause severe burns or death.

Only fill or drain fuel outdoors in a well-ventilated area. DO NOT pump gasoline directly into the generator. Use an approved container to transfer the fuel to the generator.

Never use a gasoline container, gasoline tank, or any other fuel item that is broken, cut, torn or damaged.

DO NOT overfill the gasoline tank. Always keep fuel away from sparks, open flames, pilot lights, heat and other sources of ignition.

Use clean, fresh, regular unleaded gasoline with a minimum octane rating of 85 and an ethanol content of 10% or less by volume. E10 E15 E85

DO NOT mix oil with gasoline.

1. Remove the gasoline cap.
2. Slowly add gasoline to the tank. Tank is full when gasoline reaches red circle on screen. DO NOT OVERFILL. Gasoline can expand after filling. A minimum of ¼ in. (6.4 mm) of space left in the tank is required for gasoline expansion, although more than ¼ in. (6.4 mm) is recommended. Gasoline can be forced out of the tank as a result of expansion if overfilled, and can affect the stable running condition of the generator. The approximate fuel level is shown on the fuel gauge on top of the fuel tank.

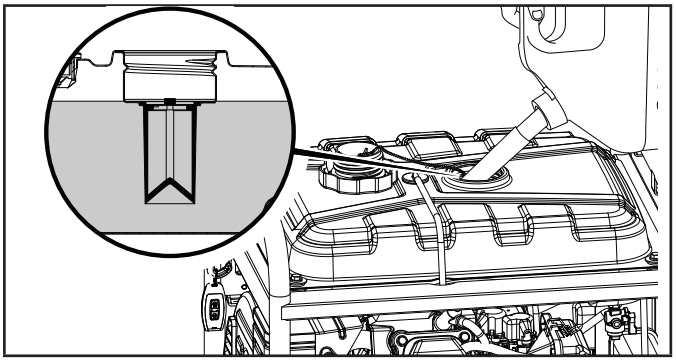

3. Screw on the gasoline cap and wipe away any spilled fuel.

⚠ CAUTION

Use unleaded gasoline with a minimum octane rating of 85 and an ethanol content of 10% or less by volume.

DO NOT light cigarettes or smoke when filling the tank.

DO NOT mix oil and gasoline.

DO NOT overfill the tank. Fill tank to approximately ¼ in. (6.4 mm) below the top of the tank to allow for gasoline expansion.

DO NOT pump gasoline directly into the generator at the pump. Use an approved fuel container to transfer the gasoline to the generator.

DO NOT fill tank indoors.

DO NOT fill tank when the engine is running or hot.

⚠ WARNING

Pouring gasoline too fast through the fuel screen may result in gasoline splashing over the generator and operator while filling.

NOTICE

The generator engine works well with 10% or less ethanol blended gasoline. When using ethanol-gasoline blends there are some issues worth noting:

- Ethanol-gasoline blends can absorb more water than gasoline alone.
- These ethanol blends can eventually separate, leaving water or a watery goo in the tank, fuel valve and carburetor. The compromised gasoline can be drawn into the carburetor and cause damage to the engine and/or create potential hazards.
- If a fuel stabilizer is used, confirm that it is formulated to work with ethanol-gasoline blends.
- Any damages or hazards caused by using ethanol blended gasoline higher than 10% by volume, improperly stored gasoline, and/or improperly formulated stabilizers, are not covered by manufacturer's warranty.

It is advisable to always shut off the gasoline supply and run the engine to starvation after each use. See Storage instructions for extended non-use.

Grounding

Your generator must be properly connected to an appropriate ground to help prevent electric shock.

⚠ WARNING

Failure to properly ground the generator can result in electric shock.

A ground terminal connected to the frame of the generator has been provided (see Controls and Features for terminal location). For remote grounding, connect a length of heavy gauge (12 AWG minimum) copper wire between the generator ground terminal and a copper rod driven into the ground. We strongly recommend that you consult with a qualified electrician to ensure compliance with local electrical codes.

Neutral Floating*

- Neutral circuit **IS NOT** electrically connected to the frame/ground of the generator.
- The generator (stator winding) is isolated from the frame and from the AC receptacle ground pin.
- Electrical devices that require a grounded receptacle pin connection will not function if the receptacle ground pin is not functional.

Neutral Bonded to Frame*

- Neutral circuit **IS** electrically connected to the frame/ground of the generator.
- The generator system ground connects lower frame cross-member below the alternator. The system ground is connected to the AC neutral wire.

**See your Specifications section for specified type of grounding.*

OPERATION

Generator Location

⚠ WARNING

NEVER operate install a this generator inside any confined spaces, building, garage, basement, crawlspace, shed, vehicles, enclosure or compartment, including a generator compartment of a recreational vehicle.

NEVER operate or start the generator in the back of an SUV, camper, trailer, truck bed (regular sides, flat or other configuration), under staircases, stairwells, next to walls or buildings or in any other location that will not allow for adequate cooling of the generator or for the proper exit of the exhaust flow from the muffler system.

It is not recommended operating or storing this generator in wet weather conditions such as rain or snow. Using a generator in wet conditions could result in serious injury or death due to electrocution. If it has to be used in damp or wet weather a recommended covering needs to be used for safety.

In some state's generators may be required to be registered with the local utility company when used at construction sites and may be subject to additional rules and regulations, consult your local municipal authority.

Generators should always be operated on a flat, level surface at all times (even when not in operation).

Generators must have a minimum of 5 feet (1.5 m) of clearance from all combustible material.

Generators must also have a minimum of 3 feet (91.4 cm) of air flow clearance on all sides to allow for adequate performance cooling, maintenance and servicing.

⚠ WARNING

Always place the generator in a well-ventilated area. NEVER place the generator near air intake vents or where exhaust fumes could be drawn into occupied or confined spaces.

Always carefully consider wind and air currents when positioning generator.

Always allow generators to properly cool before transport or for storage purposes.

Failure to follow proper safety precautions may result in personal injury, damage to the generator and void the manufacturer's warranty.

⚠ WARNING

During operation the muffler and exhaust fumes will become hot. If adequate cooling and breathing space are not supplied, or if the generator is blocked or enclosed, temperatures can become extremely heated and may lead to fire.

⚠ WARNING

Do Not install or operate this generator with any muffler/ exhaust extraction or extension in place otherwise you will damage the engine. Failure to comply with this results in your warranty immediately invalidated and terminated.

Surge Protection

Electronic devices, including computers and many programmable appliances use components that are designed to operate within a narrow voltage range and may be affected by momentary voltage fluctuations. While there is no way to prevent voltage fluctuations, you can take steps to protect sensitive electronic equipment.

– Install CE & UKCA Certified, plug-in surge suppressors on the outlets feeding your sensitive equipment.
Surge suppressors come in single- or multi-outlet styles. They're designed to protect against virtually all short-duration voltage fluctuations.

Wireless Set Button

The wireless set button is a feature that lets the user synchronize the remote key fob to the generator. Up to two remote key fobs can be synchronized to the generator at a time. Follow the proceeding steps to reset a remote or synchronize two remotes:

1. Press the START/STOP button once on the front panel of the generator. The button will flash green once per second.

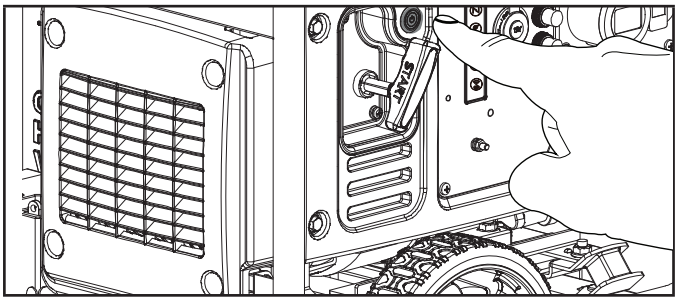

2. Push and hold the wireless set button for approximately three (3) seconds. The wireless set button will illuminate blue and the START/STOP button will stop flashing.

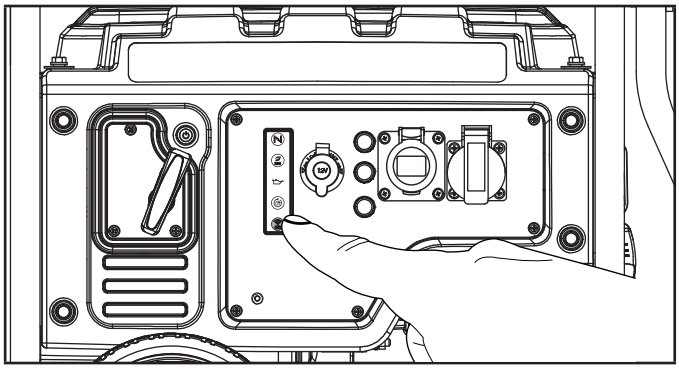

3. Push and release the STOP button on the remote key fob. The START/STOP button will flash green once and the wireless set button will flash blue once to indicate the remote program has been erased.

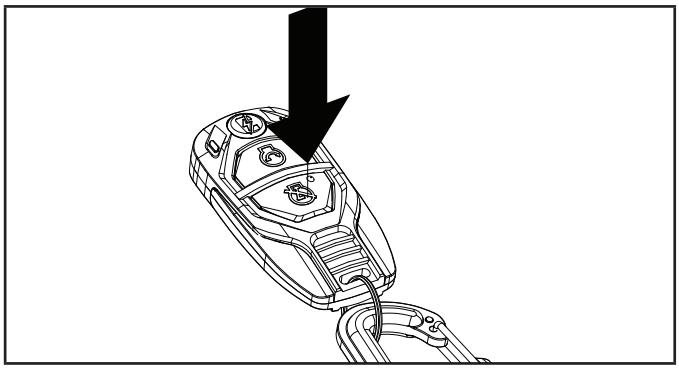

4. Push and release the START button on the remote. The START/STOP button will flash green once and the wireless set button will flash blue once and again illumniate blue to indicate the remote has been programmed.

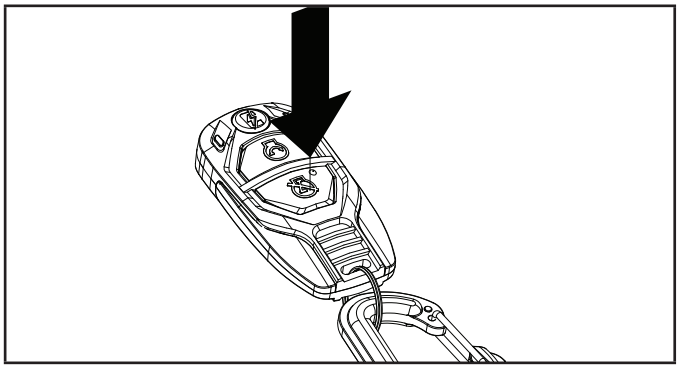

5. Push and hold the wireless set button for approximately three (3) seconds until the blue light of the wireless set button goes out, and the green light of the START/STOP button flashes once per second indicating it is in "STANDBY" mode.
6. Press the START button on the remote to start the engine and follow the remote STOP instructions to verify the remote(s) are working properly.

NOTICE

Two remote key fobs can be synchronized to the generator at one time.

NOTICE

Changing a remote key fob battery may not require the user to reset the remote. If remote does not function after changing the battery, proceed with Wireless Set Button instructions.

Starting the Engine

1. Make certain the generator is on a flat, level surface.
2. Turn the gasoline fuel valve to the “ON” position.

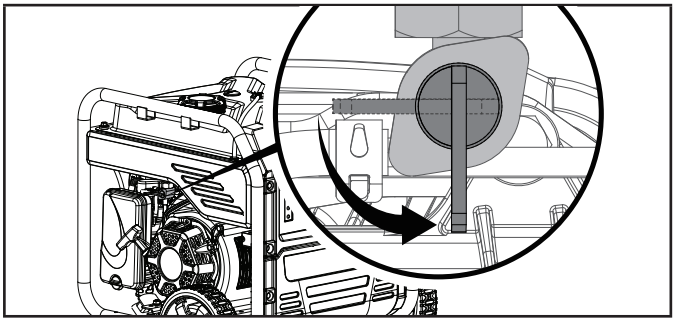

Wireless Remote Start

Wireless remote starting is only possible within 80 feet of the generator.

DO NOT attempt to adjust the choke. The remote system will automatically close and open the choke.

1. Press the START/STOP button once. The button will flash green.

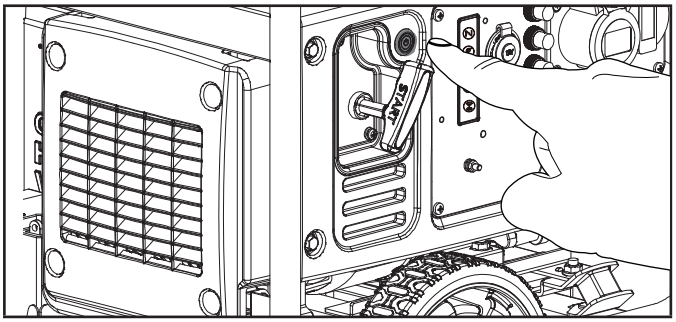

2. Press and release the “START” button on the remote control. DO NOT hold the button down, only press the button once. The engine will attempt to start six times.

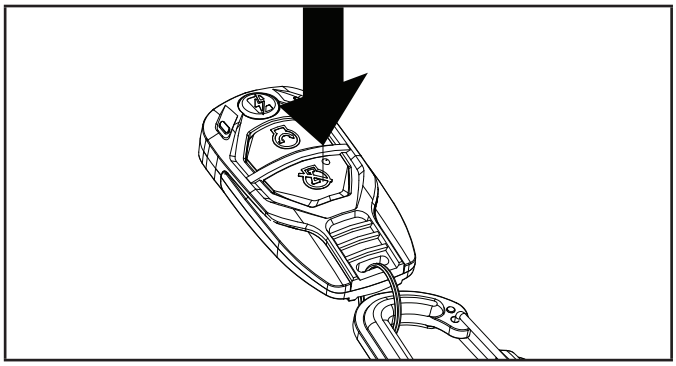

Electric Start

DO NOT attempt to adjust the choke. The remote system will automatically close and open the choke.

1. Press the START/STOP button once. The button will flash green but the generator will not attempt to start.

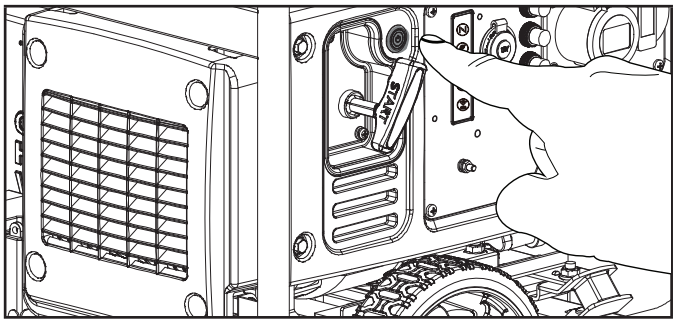

2. Press the START/STOP button a second time. The button will now flash green once per half second and the generator will attempt to start. There will be (6) starting attempts. After generator starts, the button will turn solid green.

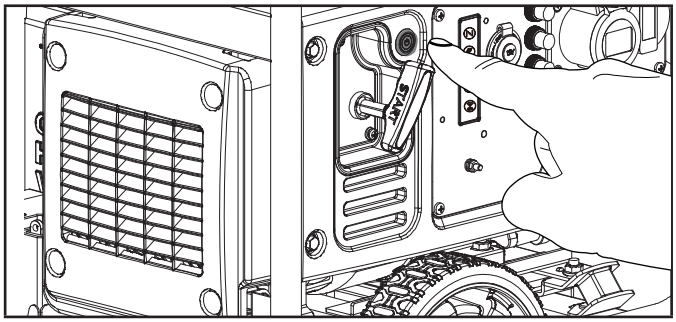

Manual Start

1. Disconnect all electrical loads from the generator. Never start or stop the generator with electrical devices turned on.
2. Press the START/STOP button once. The button will flash green.

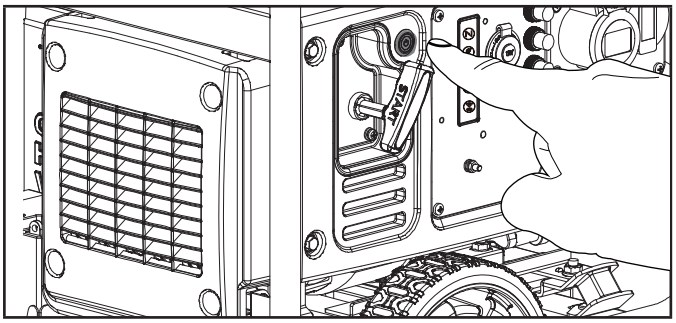

3. Press the choke button until illuminated green.

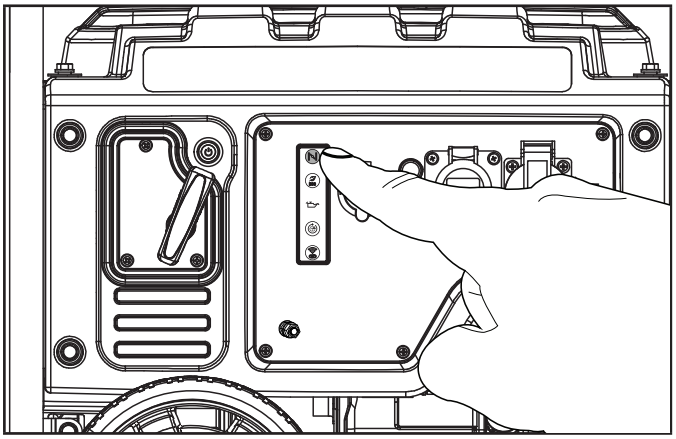

4. Pull the recoil cord slowly until resistance is felt and then pull rapidly. If several pulls are required or starting in cold ambient temperature < 59°F (15°C), see notices below.

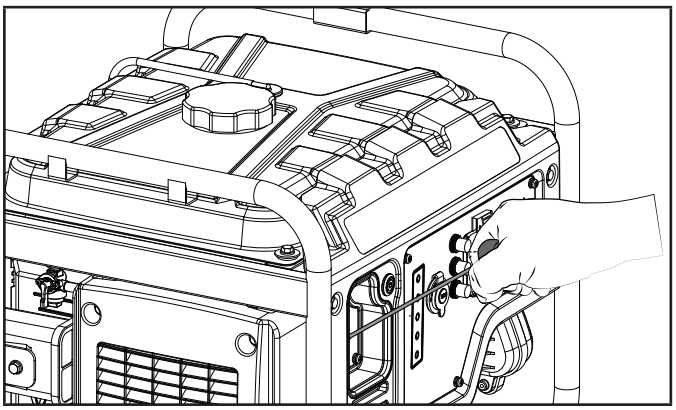

5. Press the choke button until no longer illuminated green.

NOTICE

If the engine starts but does not continue to run make certain that the generator is on a flat, level surface. This engine is equipped with a low oil sensor that will prevent the engine from running when the oil level falls below a critical threshold.

Battery

NOTICE

When the START/STOP button is pushed to “STANDBY” mode, the button will flash green if the battery is sending out a charge. If the button does not flash green while in “STANDBY” mode, check that the battery connection is still good.

NOTICE

The supplied 12V battery does re-charge while the engine is running, but it is also recommended that the battery needs be fully charged at least once per month or maintained with a trickle charger or battery maintainer (not included) especially if the generator isnt used regular, batteries supplied are covered by 1 year warranty and are not included in the extended 3 years offered.

Connecting Electrical Loads

Let the engine stabilize and warm up for a few minutes after starting.

Plug in and turn on the desired 240 Volt AC single phase, 50 Hz electrical loads.

– DO NOT connect 3-phase loads to the generator.

– DO NOT overload the generator.

⚠ WARNING

Always remember to plug your appliances directly into the generator and do not plug the generator power cord into any electrical outlet or connect to the circuit breaker panel in your home. Connecting a generator to your home’s electric utility company’s power lines, or to another power source, called ‘backfeeding’ is a dangerous practice that is illegal in many states and municipalities.

This action if done incorrectly could damage your generator, appliances and could cause serious injury or death to you or a utility worker when attempting to restore power during an outage occurrence in the neighborhood who may then unexpectedly encounter high voltage on the utility line and suffer a fatal shock.

Whether injuries occur or not, if installed incorrectly and not to applicable laws and codes, you may be subject to fines or the utility company may disconnect your home power should this practice be found in your home.

If the generator will be connected to a building electrical system, those connections must isolate the generator power from the utility power. You are responsible for ensuring your generator’s electricity does not backfeed into the electric utility power lines. These connections must comply with all applicable laws and codes – Consult your local utility company or a qualified electrician to properly install this connection.

Do Not Overload Generator

Capacity

Follow these simple steps to calculate the running and starting watts necessary for your purposes:

1. Select the electrical devices you plan on running at the same time.
2. Total the running watts of these items. This is the amount of power you need to keep your items running.
3. Identify the highest starting wattage of all devices identified in step 1. Add this number to the number calculated in step 2. Starting wattage is the surge of power needed to start some electric driven equipment. Following the steps listed under “Power Management” will guarantee that only one device will be starting at a time.
4. If the generator power output is cut off due to an overload condition indicated by the AC overload blinking light, lower the load by unplugging one or more items, then press the AC overload reset button before restarting the generator for continued normal operation.

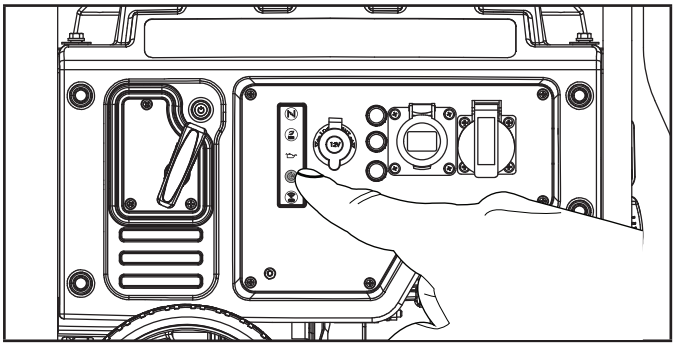

Power Management

Use the following formula to convert voltage and amperage to watts:

Volts × Amps = Watts

To prolong the life of your generator and attached devices, follow these steps to add electrical load:

1. Start the generator with no electrical load attached.
2. Allow the engine to run for several minutes to get up to temperature.
3. Plug in and turn on the first item. It is best to attach the item with the largest load first.
4. Allow the engine to stabilize.
5. Plug in and turn on the next item.
6. Allow the engine to stabilize.
7. Repeat steps 5-6 for each additional item.

NOTICE

Never exceed the specified capacity when adding loads to the generator.

Eco (Economy) Mode

The Eco Mode button can be activated to turn on economy control in order to minimize fuel consumption and noise while operating the unit during times of reduced electrical output. Eco Mode allows the engine speed to idle during periods of non-use.

The engine speed returns to normal when an electrical load is connected. When the economy switch is off, the engine runs at normal speed continuously.

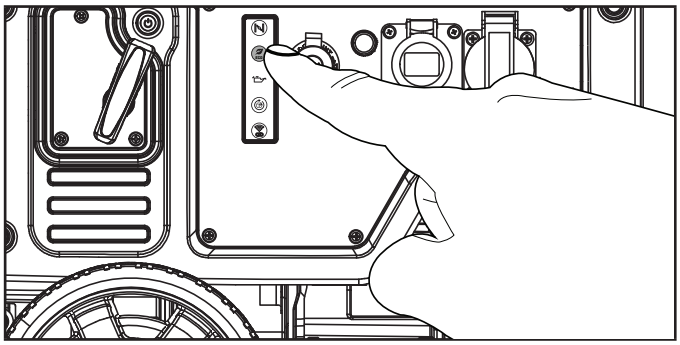

⚠ CAUTION

For periods of high electrical load or momentary fluctuations, the Eco Mode MUST be turned off.

Stopping the Engine

Remote Stop

1. Turn off all electrical connected loads. Never start or stop the generator with electrical devices turned on.
2. Let the generator run at no-load for several minutes to stabilize internal temperatures of the engine and generator.
3. Press the “STOP” button on the remote.

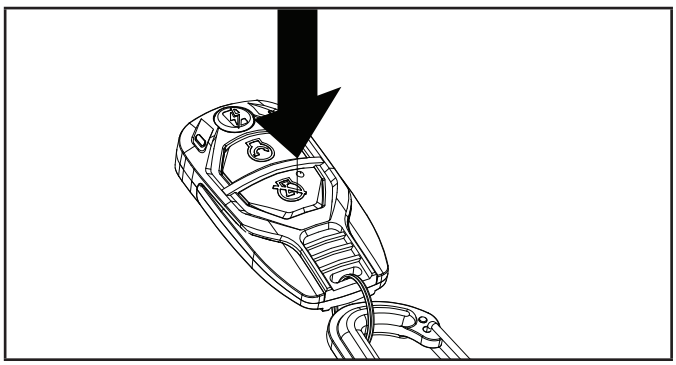

NOTICE

Engine will shut off but the START/STOP button will remain in "STANDBY" mode for 12 hours and fuel valve will remain in the "ON" position waiting for the next start instruction.

To completely shut down the generator, make sure the START/STOP button is in "OFF" mode and no longer flashing green and fuel valve is turned to "OFF" position when the generator will not be used for an extended period of time.

NOTICE

Battery power is drawn while the generator is in standby mode (START/STOP button flashing green).

The generator will stay in standby mode for 12 hours if shut down using the Remote Control.

To turn standby mode off manually, push and hold the "STOP" button on the remote control for 5 seconds or push and hold the START/STOP button on the control panel for 5 seconds. The RCM will no longer consume any battery power or wait for remote signal. This is indicated by the START/STOP button no longer flashing.

Manual Stop

1. Turn off and unplug all electrical connected loads. Never start or stop the generator with electrical devices turned on.
2. Let the generator run at no-load for several minutes to stabilize internal temperatures of the engine and generator.
3. Press the START/STOP button.

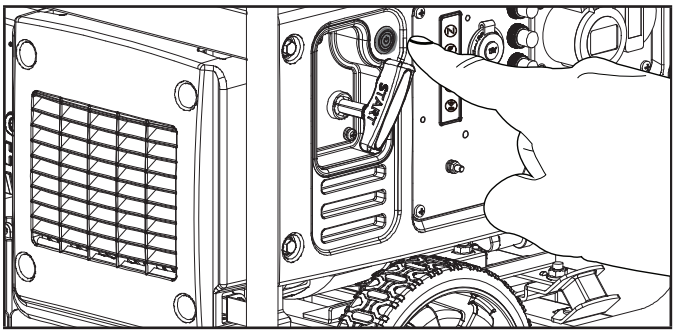

4. Turn the fuel valve to the "OFF" position.

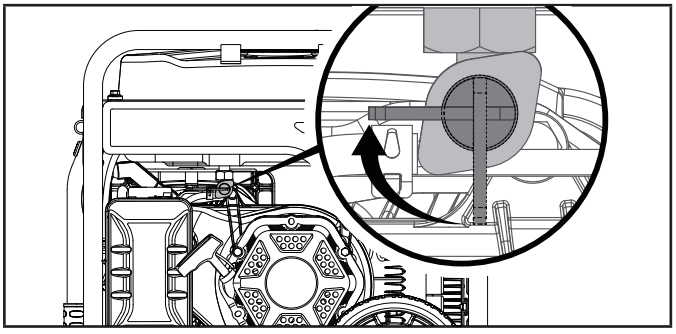

Important: Always ensure that the START/STOP button is "OFF" and not illuminated and fuel valve is in the "OFF" position when the generator will not be used for an extended period of time.

NOTICE

If the engine will not be used for a period of two (2) weeks or longer, please see the *Storage* section for proper engine and fuel storage.

Moving the Generator

– NEVER lift or carry the generator using the folding handle.
– ALWAYS place the generator on its wheels in the upright position.
– ALWAYS turn the generator off and ensure the fuel valve is closed.
– ALWAYS make sure engine and muffler are cooled down before the generator can be handled safely (typically 15-30 minutes).

1. Begin by raising the folding handle, found on opposite side of wheels.
2. Using the handle, tilt the end of the generator slightly off the ground until balanced on the wheels.
3. While maintaining balance, roll the generator to the desired location.

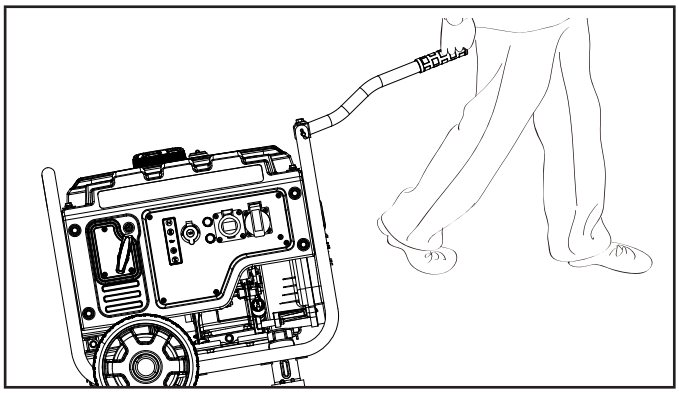

– NEVER tilt sideways while moving the generator.
– Failure to follow these instructions could result in personal injury or damage to the generator.

MAINTENANCE

Make certain that the generator is kept clean and stored properly. Only operate the unit on a flat, level surface in a clean, dry operating environment. DO NOT expose the unit to extreme conditions, excessive dust, dirt, moisture or corrosive vapors.

⚠ WARNING

Never operate a damaged or defective generator.

⚠ WARNING

Improper maintenance will void your warranty.

NOTICE

For Emission control devices and systems, read and understand your responsibilities for service as stated in the Emission Control Warranty Statement of this manual.

The owner/operator is responsible for all periodic maintenance.

Complete all scheduled maintenance in a timely manner.

Correct any issue before operating the generator.

For service or parts assistance, contact our Technical Support Team at +44(0)1942-715-407.

Cleaning the Generator

⚠ CAUTION

DO NOT spray generator directly with water.

Water can enter the generator through the cooling slots and damage the generator windings. It can also contaminate the fuel system.

1. Use a damp cloth to clean exterior surfaces of the generator.
2. Use a soft bristle brush to remove dirt and oil.
3. Use an air compressor (25 PSI) to clear dirt and debris from the generator.
4. Inspect all air vents and cooling slots to ensure that they are clean and unobstructed.

To prevent accidental starting, remove and ground the spark plug wire before performing any service.

Changing the Engine Oil

Change oil when the engine is warm. Refer to the oil specification to select the proper grade for your operating environment.

1. Remove the oil drain plug with a 12 mm socket (not included) and extension.

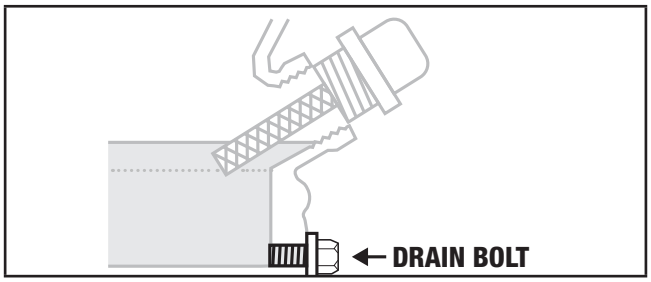

2. Allow the oil to drain completely into an appropriate container.
3. Replace the oil drain plug.
4. Remove the oil fill cap/dipstick to add oil.
5. Add oil according to “Add Engine Oil” on Assembly section. DO NOT OVERFILL. Oil not included for routine maintenance.
6. Dispose of used oil at an approved waste management facility.

NOTICE

Once oil has been added, a visual check should show oil about 1-2 threads from running out of the fill hole. If using the dipstick to check oil level, DO NOT screw in the dipstick while checking.

Cleaning and Adjusting the Spark Plug

1. Remove the spark plug cable from the spark plug.
2. Use a spark plug socket tool (not included), or a 13/16 in. (21 mm) socket (not included) to remove the plug.
3. Inspect the electrode on the plug. It must be clean and not worn to produce the spark required for ignition.
4. Make certain the spark plug gap is 0.028-0.031 in. (0.7-0.8 mm).

⚠ CAUTION

Failure to clean/replace the spark plug regular will result in poor engine performance, poor fuel consumption or worse damaged engine components.

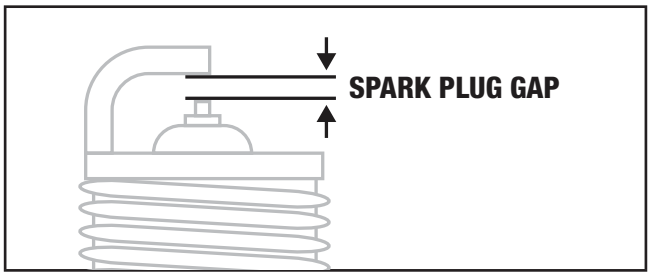

5. Refer to the spark plug types in Specifications when replacing the plug.
6. Firmly re-install the plug.
7. Attach the spark plug cable to the spark plug.

Cleaning the Air Filter

1. Unscrew the cover holding the air filter to the assembly by turning the fastener counterclockwise.
2. Remove the foam element.
3. Wash in liquid detergent and water. Squeeze thoroughly dry in a clean cloth.
4. Saturate in clean engine oil.
5. Squeeze in a clean, absorbent cloth to remove all excess oil.
6. Place the filter in the assembly.
7. Reattach the air filter cover and tighten the fastener by turning clockwise.

Cleaning the Spark Arrestor

1. Allow the engine to cool completely before servicing the spark arrestor.
2. Remove the two or three screws (varies by model) holding the cover plate which retains the spark arrestor to the muffler.
3. Remove the spark arrestor screen.
4. Carefully remove the carbon deposits from the spark arrestor screen with a wire brush.

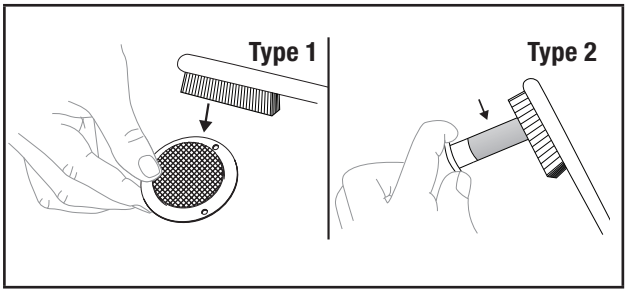

**See your model's parts list for specified type of spark arrestor.*

5. Replace the spark arrestor if it is damaged.
6. Position the spark arrestor on the muffler and attach with the screws removed in step 2.

⚠ CAUTION

Failure to clean the spark arrestor regular will result in poor engine performance, poor fuel consumption or worse damaged engine components.

NOTICE

Federal and local laws and administrative requirements indicate when and where spark arrestors are required. When ordered, spark arrestors are required for operation of this generator in National Forest lands. In California, this generator must not be used on any forest-covered land, brush-covered land, or grass-covered land unless the engine is equipped with a spark arrestor.

Adjusting the Governor

⚠ WARNING

Tampering with the factory set governor will void your warranty.

The air-fuel mixture is not adjustable. Tampering with the governor can damage your generator and your electrical devices and will void your warranty. Contact our Technical Support Team at +44(0)1942-715-407 for all other service and/or adjustment needs.

Generator Battery

Your generator is equipped with an automatic battery charging circuit that charges the battery while the engine is running. The battery will maintain a proper charge if the unit is used on a regular basis (about once every two weeks). If it is used less frequently, the battery should be connected to a trickle charger or battery maintainer (not included) to keep the battery properly charged.

Maximum charging rate should not exceed 1.5 amps. Follow the instructions included with the battery charger. The battery should be fully charged at least once per month. If the battery is not able to start the engine, it can be started by manually pulling the engine recoil cord. If the battery voltage is extremely low, the charging circuit may not be able to re-charge the battery. In this case, the battery must be connected to a standard automotive style battery charger for re-charging before it can be used.

Disconnect the Battery

1. Pull two halves of battery connector apart.

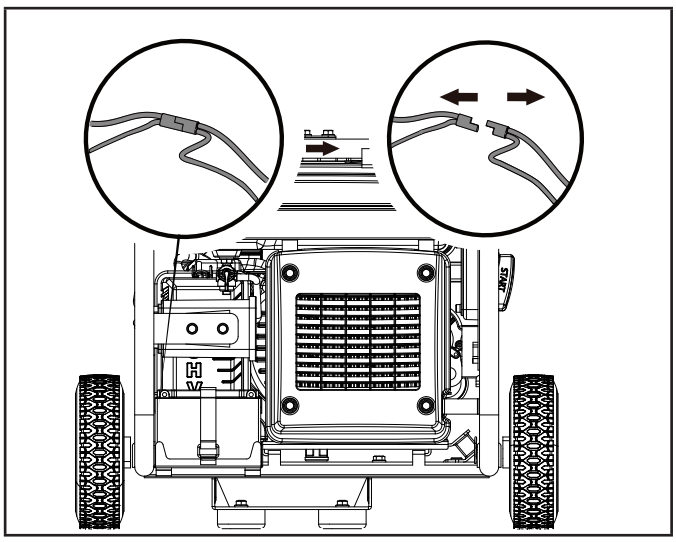

Charge the Battery

For a generator equipped with batteries for electric starting, proper battery maintenance and storage should be followed. A trickle charger or battery maintainer should be used to charge

the battery while the generator is in storage. Maximum charging rate should not exceed 1.5 amps. Follow the instructions included with the trickle charger or battery maintainer. The battery should be fully charged at least once per month.

Remote Key Fob Battery

Batteries have a shelf life and after time used or unused will deteriorate

NOTICE

- Always purchase the correct size and grade of battery most suitable for the intended use.
- Clean the battery contacts and also those of the device prior to battery installation.
- Remove batteries from equipment which is not to be used for an extended period of time.
- Remove batteries if consumed or if product is to be left unused for a long time.

1.Remove the remote key fob from the key ring.

2.Remove the screw with a Phillips screwdriver (not included) by turning anti-clockwise.

3.Pry the two halves of the remote key fob apart slightly at the key ring end gently with a small flat headed screwdriver

4.Separate the two halves of the remote key fob gently by sliding the back side of the remote key fob up toward the key ring end.

5.Carefully remove the circuit board to locate and replace the CR2016 battery.

6.Reverse these instructions from 5:1 to reassemble the remote key fob.

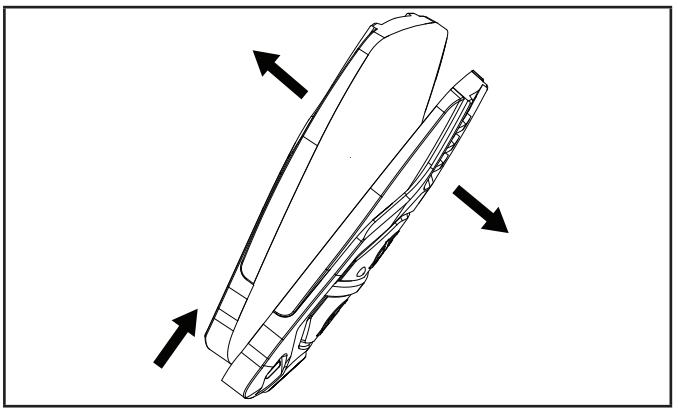

After a battery change if your remote transmitter doesn't work you will need to pair your remote transmitter again, please follow the instructions in this manual to reprogramme transmitter to the receiver.

Maintenance Schedule

Follow the service intervals indicated in the following maintenance schedule.

Service your generator more frequently when operating in adverse conditions.

Contact our Technical Support Team at +44(0)1942-715-407 to locate the nearest CPE certified service dealer for your generator or engine maintenance needs.

EVERY 8 HOURS OR PRIOR TO EACH USE

- ☐ Check oil level
- ☐ Clean around air intake and muffler

FIRST 5 HOURS (BREAK IN)

- ☐ Change oil

EVERY 50 HOURS OR ANNUALLY

- ☐ Clean air filter
- ☐ Change oil if operating under heavy load or in hot environments

EVERY 100 HOURS OR ANNUALLY

- ☐ Change oil
- ☐ Clean/adjust spark plug
- ☐ Clean spark arrestor
- ☐ Clean fuel valve filter*

EVERY 250 HOURS

- ☐ Clean combustion chamber*
- ☐ Check/adjust valve clearance*

EVERY 3 YEARS

- ☐ Replace fuel line*

** To be performed by knowledgeable, experienced owners or CPE certified service centers.*

STORAGE

⚠ WARNING

To avoid accidental or unintended ignition of your generator during periods of storage, the following precautions should be followed:

– When storing the generator make sure the START/STOP button is “OFF” and not illuminated and fuel valve is set to the “OFF” position.

Short Term Storage (up to 30 days)

Ethanol blended gasoline may gum up and clog the carburetor if the generator is not run or carburetor drained within 4 weeks.

1. Be sure all appliances are disconnected from the generator.
2. Start the generator as instructed in *Starting the Engine* section.
3. Turn the fuel valve to the “OFF” position.
4. Let the engine run until fuel starvation has stopped the engine. This usually takes a few minutes.
5. If started using remote, press START/STOP button one more time to ensure the generator is “OFF” and not in “STANDBY” mode and blinking green.

Mid Term Storage (30 days – 1 year)

Ethanol blended gasoline in the tank has a maximum shelf life of up to 1 year with the addition of a properly formulated fuel stabilizer and stored in a cool, dry place.

1. Be sure all appliances are disconnected from the generator.
2. Add a properly formulated fuel stabilizer to the gasoline tank.
3. Turn the fuel valve to the “ON” position.
4. Start and run the generator for 10 minutes so the treated gasoline cycles through the fuel system.
5. **Option 1: Drain Gasoline from Carburetor**

   5a. Turn off the generator by pushing the START/STOP button. If started using remote, press START/STOP button one more time to ensure the generator is “OFF” and not in “STANDBY” mode and blinking green.

   5b. Turn the fuel valve to the “OFF” position.

   5c. Use the drain bolt on the carburetor to empty any excess gasoline from the carburetor into an appropriate container. Use a funnel (and appropriate hose if necessary) under the carburetor drain bolt to avoid spillage.

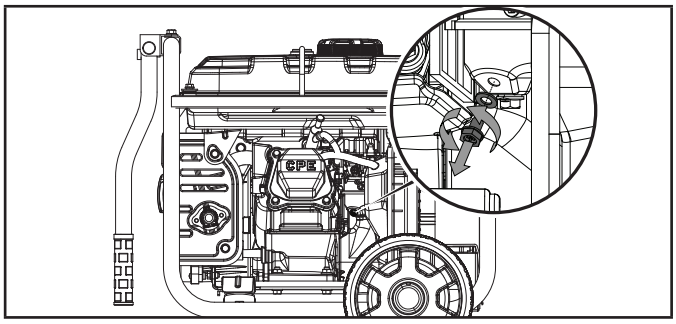

   5d. When gasoline stops flowing from the carburetor, replace and tighten the carburetor drain bolt and be sure to properly dispose of the drained gasoline according to local regulations or guidelines.

6. **Option 2: Run Dry**

   6a. With the generator running, turn the fuel valve to the “OFF” position and allow the generator to run until the engine stops from complete fuel starvation. This may take a few minutes.

   6b. If started using remote, press START/STOP button one more time to ensure the generator is “OFF” and not in “STANDBY” mode and blinking green.

7. Remove the spark plug cap and spark plug and pour about a tablespoon of oil into the cylinder.
8. Pull the recoil cord slowly to crank the engine to distribute the oil and lubricate the cylinder.
9. Install the spark plug and spark plug cap.
10. Clean the generator according to *Cleaning the Generator*.
11. Store the generator in a cool, dry place out of direct sunlight.

Long Term Storage (over 1 year)

For storage over 1 year, the gasoline tank and carburetor must be completely drained of gasoline.

1. The generator is to be OFF and all appliances disconnected. Make sure the START/STOP button is not blinking green and in “STANDBY” mode.
2. Turn the fuel valve to the “ON” position.
3. Use the drain bolt on the carburetor to empty any excess gasoline from the gasoline tank and carburetor into an appropriate container. Use a funnel (and appropriate hose if necessary) under the carburetor drain bolt to avoid spillage.
4. When gasoline stops flowing from the carburetor, replace and tighten the carburetor drain bolt and be sure to properly dispose of the drained gasoline according to local regulations or guidelines.
5. Turn the fuel valve to the “OFF” position.
6. Follow steps 7-11 according to *Mid Term Storage*.

Removing from Storage

NOTICE

If the generator has been improperly stored for a period longer than 30 days with ethanol blended gasoline in the gasoline tank and/or carburetor, all fuel must be drained and the carburetor must be thoroughly cleaned of ethanol build up. This process involves technically advanced tasks. For assistance please call our Technical Support Team at +44(0)1942-715-407.

If the gasoline tank and carburetor were properly emptied of all ethanol blended gasoline prior to the generator being stored, follow the below steps when removing from storage.

1. Add gasoline to the generator according to *Add Fuel.*
2. Turn the fuel valve to the “ON” position.
3. After 5 minutes check the carburetor and air filter areas for any leaking gasoline. If any leaks are found, the carburetor will need to be disassembled and cleaned or replaced. If no gasoline leaks are found, turn the fuel valve to the “OFF” position.
4. Check engine oil level and add clean, fresh oil if needed. See *Oil Specifications* for proper oil type.
5. Check and clear air filter of any obstructions such as bugs or cobwebs. If necessary, clean air filter according to *Cleaning the Air Filter*.
6. Start the generator according to *Starting the Engine*.

SPECIFICATIONS

Generator Specifications

Generator Model	CPG4000DHY-UK
Start Type	Wireless, Electric, Manual
Watts (Max/Running)	3600/3500
Volts AC	240
AC Amps @ 240V	14.6
Volts DC	12
DC Amps	8
Frequency	50 Hz
Phase	Single
Grounding Type	Neutral Floating
Weight	93.9 lb. (42.6 kg)
Length	23.5 in. (59.8 cm)
Width	24.4 in. (621 cm)
Height	20.5 in. (52 cm)
Measured sound pressure level (7m Eco Mode)	64dB(A)
Guaranteed sound power level	96 dB(A)
Noise measurement uncertainty	≤1.5 dB(A)

Engine Specifications

Model	YF172IV
Displacement	224 cc
Type	4-Stroke OHV

Spark Plug

OEM Type	F6RTC
Replacement Type	NGK BPR6ES or equivalent
Gap	0.028-0.031 in. (0.7-0.8 mm)

Valve

Intake Clearance	0.13-0.17 mm. (0.005-0.007 in.)
Exhaust Clearance	0.18-0.22 mm (0.007-0.009 in.)

NOTICE

A technical bulletin regarding valve adjustment procedures is available at www.championpowerequipment.co.uk

Oil Specifications(Oil not included)

DO NOT OVERFILL.

Type	*See following chart
Capacity	20.3 fl. oz. / 0.6 qt. (0.6 L)

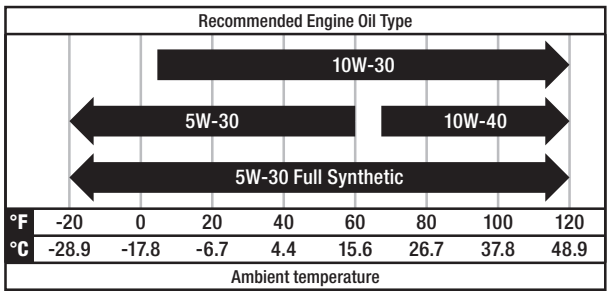

NOTICE

Temperature will affect engine oil and engine performance. Change the type of engine oil used based on temperature shown in the *"Recommended Engine Oil Type"* table.

Fuel Specifications

Use unleaded gasoline with a minimum octane rating of 85 and an ethanol content of 10% or less by volume. DO NOT USE E15 or E85. DO NOT OVERFILL.

Gasoline Capacity	2.9 gal. (11 L)

Battery Specifications

Type	Rechargeable, Non-Spillable Lead Acid
Volts DC	12
Capacity	7 Ah

Temperature Specifications

Starting Temperature Range (°F/°C)	5 to 104/-15 to 40
Remote Starting Temperature Range (°F/°C)	5 to 104/-15 to 40

NOTICE

An important message about temperature: Your product is designed and rated for continuous operation at ambient temperatures up to 104°F (40°C). When needed, it may be operated at temperatures ranging from 5°F (-15°C) to 122°F (50°C) for short periods of time. If exposed to temperatures outside this range during storage, it should be brought back within this range before operation. In any event, the product must always be operated outdoors, in a well-ventilated area and away from doors, windows and vents.

Parts Diagram

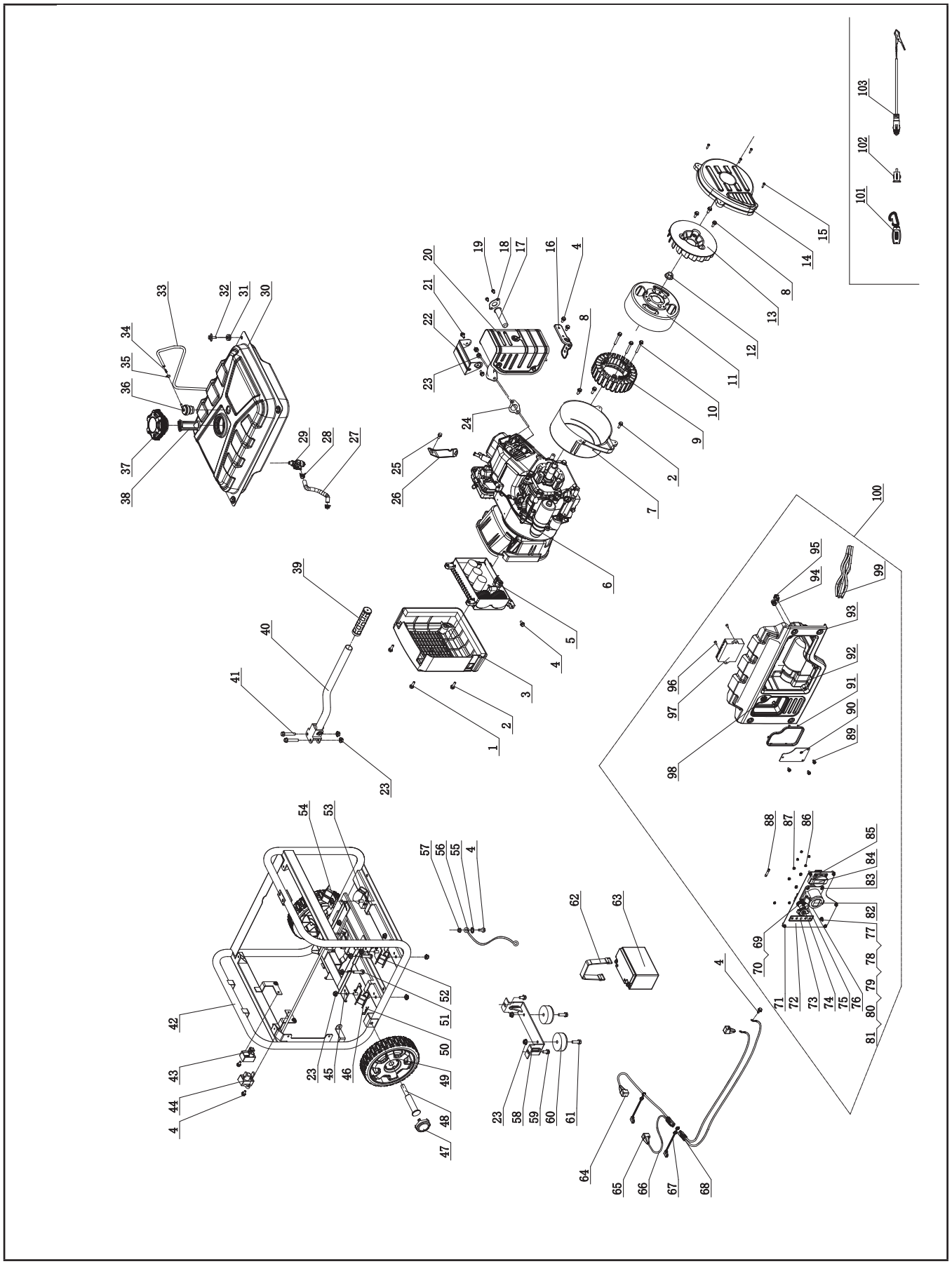

Parts List

#	Part Number	Description	Qty.
1	1.5789.0625	Flange Bolt M6 x 25	2
2	1.5789.0620	Flange Bolt M6 x 20	4
3	85.220005.01	Protection Cover, Control Unit	1
4	1.5789.0612	Flange Bolt M6 x 12	7
5	85.221000.10	Control Unit, 3.3KW, 230V/50Hz, Wireless Parallel	1
6	CPG4000DHY-UK	Engine, 224cc	1
7	85.190002.01	End Housing, Motor	1
8	1.5789.0615	Flange Bolt M6 x 15	4
9	85.191200.16	Stator Assembly	1
10	1.9074.14.0650	Bolt/Washer Assembly M6 x50	3
11	85.191100.03	Rotor Assembly	1
12	2.02.006	Nut M14 x 1.5	1
13	83.190001.01	Fan, Generator	1
14	85.190003.01	End Cover, Generator	1
15	1.845.4219	Screw ST4.2 x 19	4
16	85.100100.01.2	Bracket, Muffler	1
17	46.101300.08	Spark Arrester Assembly	1
18	46.101503.08	Plate, Spark Arrester	1
19	1.9074.4.0514	Screw/Washer Assembly M5 x 14	2
20	85.101000.01.2	Muffler Assembly	1
21	1.5789.0610	Flange Bolt M6 x 10	2
22	85.101203.01.2	Cover, Exhaust Pipe	1
23	1.6177.1.08	Lock Nut M8, Flange	18
24	26.100001.00	Gasket, Muffler	1
25	1.5789.0608	Flange Bolt M6 x 8	1
26	23.090006.21	Holder, Air Cleaner	1
27	85.070011.01	Pipe, Fuel, 140mm	1
28	2.06.007	Clamp, Ø8.2 x b6	2
29	85.070400.01	Fuel Valve	1
30	85.071000.02.48	Fuel Tank, 11L, Yellow	1
31	122.070015.01	Mount Vibration, Fuel Tank	4
32	2.08.143	Flange Bolt/Washer Assembly M6 x 20	4
33	85.070014.02	Pipe, Reversal Valve, 540mm	1
34	24.070030.00	Hole, Breather Tube	1
35	2.06.006	Clamp, Ø7 x Ø1	1

#	Part Number	Description	Qty.
36	152.070800.00	Reversal Valve	1
37	122.070100.09	Fuel Tank Cap	1
38	122.070300.03	Fuel Filter	1
39	152.200702.00	Cover, Handle	1
40	122.200700.03.2	Handle	1
41	1.5789.0845	Flange Bolt M8 x 45	2
42	61170.0.2	Frame, 520 x 481 x 444mm	1
43	5.1820.001	Charger	1
44	5.1800.009	Rectifier	1
45	85.201600.01	Supporter	1
46	85.201200.01	Motor Mount, 1	1
47	122.201701.11.48	8 in. Wheel, PU, Yellow	2
48	122.201501.23	Pin Roll, Wheel, Ø16 x Ø10 x 97	2
49	122.201702.11.48	Wheel Cover, Tooth Profile 8-10 in, Black	2
50	2.16.001	Pin Ø2 x 33, "R" Shape	2
51	1.5789.0832	Flange Bolt M8 x 32	4
52	85.201200.02	Motor Mount, 2	2
53	85.201200.03	Motor Mount, 3	1
54	85.100007.01	Insulation Board, Motor Mount	1
55	1.862.06	Lock Washer Ø6, Toothed	1
56	5.1900.179	Grounding Line, 180mm	1
57	1.6177.1.06	Lock Nut M6, Flange	1
58	152.200002.00.2	Support Leg 60 mm	1
59	1.5789.0816	Flange Bolt M8 x 16	2
60	152.201400.00	Rubber, Support	2
61	1.5789.0825	Flange Bolt M8 x 25	2
62	122.200904.00	Pinch, Rubber	1
63	9.1000.07001	Battery 12V7AH	1
64	152.200013.02	Jacket, Wire, Black	1
65	152.200013.02.3	Jacket, Wire, Red	2
66	5.1900.127	Wire, To SAE Battery	1
67	152.200013.03	Sleeve, Connector	2
68	5.1900.146	Wire, To SAE Motor	1
69	5.1200.308	8Amp Circuit Breaker, Push Button	1
70	5.1870.014	Circuit Breaker Cover, Push Button	3

#	Part Number	Description	Qty.
71	1.9074.4.0512	Screw/Washer Assembly M5 x 12	5
72	85.019.19.2	Control Panel, Black	1
73	83.210016.01	Speed Limiter	1
74	5.1110.005	Receptacle, DC 12V	1
75	5.1210.913	13Amp Circuit Breaker, Push Button	1
76	5.1210.916	16Amp Circuit Breaker, Push Button	1
77	1.5783.0520	Bolt M5 x 20	1
78	1.93.05	Lock Washer Ø5	2
79	1.862.05	Lock Washer Ø5, Toothed	1
80	1.6170.05	Nut M5	2
81	1.97.1.05	Washer Ø5	2
82	5.1120.014	Receptacle	1
83	1.819.0516	Screw M5x 16	4
84	5.1120.063	Receptacle	1
85	1.819.0416	Screw M4 x 16	4
86	1.6177.1.04	Lock Nut M4, Flange	6
87	1.6177.1.05	Lock Nut M5, Flange	4
88	5.1280.003	Fuse, 10A	1
89	1.9074.4.0514	Screw/Washer Assembly M5 x 14	3
90	85.061200.01.2	Guide Plate, Rope, Black	1
91	85.200106.01	Protector, Front Cover	1
92	85.210002.02	Control Box	1
93	1.5789.0615	Flange Bolt M6 x 15	4
94	5.1460.017	Pilot Lamp	1
95	5.1040.004	Remote Excercise Button	1
96	1.845.4216	Screw ST4.2 x 16	2
97	5.1830.023	Remote Control	1
98	5.1040.013	Switch, Button Start	1
99	CPG4000DHY-UK.21.10	Wire Assembly	1
100	CPG4000DHY-UK.21	Control Panel Assembly	1
101	9.2600.003.99	Remote	1
102	9.1700.008	Plug, USB 5V/2.4A	1
103	9.1600.012	Cables, 12V, 2m	1

Engine Parts Diagram

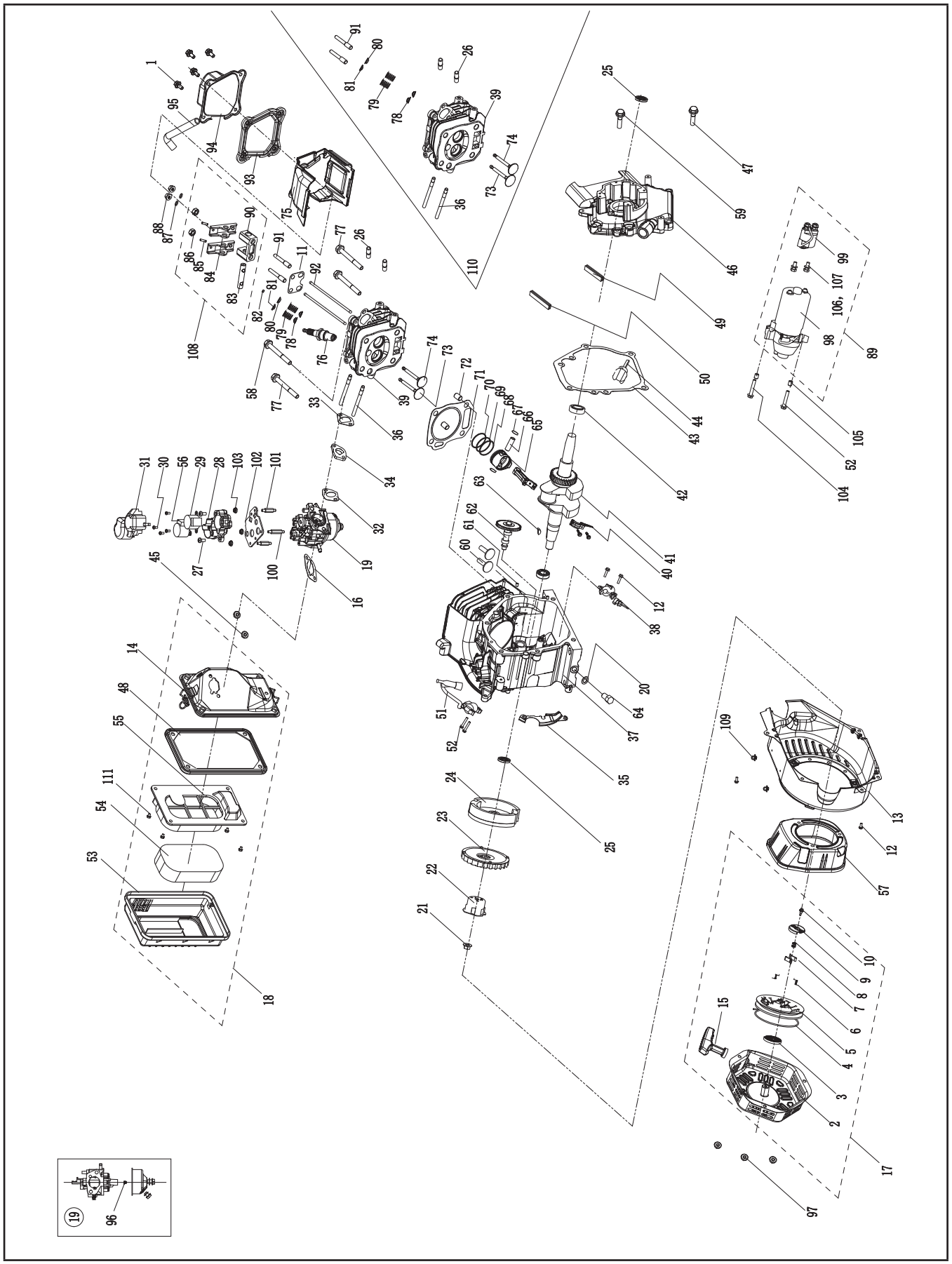

Engine Parts List

#	Part Number	Description	Qty.
1	1.5789.0615	Flange Bolt M6 x 15	4
2	85.061100.00.2	Cover, Recoil Starter, Black	1
3	21.061005.00	Spring, Recoil Starter	1
4	2.10.003.1	Rope Ø4 x 1550, Black	1
5	21.061001.01	Reel, Recoil Starter	1
6	45.060003.00	Spring, Ratchet	2
7	45.060002.00	Starter Ratchet, Steel	2
8	45.060009.00	Spring, Ratchet Guide	1
9	45.060007.00	Ratchet Guide	1
10	45.060008.00	Screw, Ratchet Guide	1
11	24.040004.00	Guide Plate, Push Rod	1
12	1.5789.0612	Flange Bolt M6 x 12	6
13	85.080100.02.48	Fan Cover, Yellow	1
14	85.091100.01	Base, Air Cleaner	1
15	21.061300.01.48	Handle, Recoil, Soft, Yellow	1
16	24.130004.20	Gasket, Air Cleaner	1
17	85.061000.02	Recoil Assembly	1
18	85.091000.01	Air Cleaner Assembly	1
19	85.131000.06	Carburetor	1
20	2.03.016	Washer Ø10 x Ø16 x 1.5, Drain Bolt	1
21	2.02.006	Nut M14 x 1.5	1
22	23.060001.01	Pulley, Starter	1
23	27.080001.00	Cooling Fan	1
24	24.120100.10	Flywheel	1
25	2.11.001	Oil Seal Ø25 x Ø41.3 x 6	2
26	2.01.010	Stud Bolt M8 x 35	2
27	1.9074.4.0512.1	Screw M5 x 12, Black	2
28	85.132100.03	Support, Stepper Motor	1
29	85.132200.01	Stepper Motor	1
30	1.823.0306.1	Screw M3 x 6	4
31	81.132001.00	Cover, Stepper Motor	2
32	22.130003.00	Gasket, Carburetor	1
33	24.130002.00	Gasket, Insulator	1
34	27.130001.00	Insulator, Carburetor	1
35	27.080600.00	Air Guide, Right Side	1
36	2.01.003	Stud Bolt M6 x 90	2
37	85.030100.01.1	Crankcase	1
38	21.127000.02	Oil Level Sensor	1
39	26.010100.01	Cylinder Head, 224cc	1

#	Part Number	Description	Qty.
40	27.050200.00	Connecting Rod	1
41	85.050100.01	Crankshaft	1
42	1.276.6205	Bearing 6205	2
43	24.030008.00	Gasket, Crankcase Cover	1
44	46.031000.00.48	Oil Dipstick Assembly, Yellow	1
45	1.6177.06	Flange Nut M6	2
46	85.030007.01	Cover, Crankcase	1
47	1.5789.0832	Flange Bolt M8 x 32	5
48	23.091002.21	Seal, Air Cleaner	1
49	27.030013.01	Seal Strip, Crankcase Cover, Short	1
50	27.030013.00	Seal Strip, Crankcase Cover, Long	1
51	22.123000.02	Ignition Coil	1
52	1.5789.0625	Flange Bolt M6 x 25	3
53	27.091200.01	Cover, Air Cleaner	1
54	23.091003.21	Element, Air Cleaner	1
55	23.091001.21	Separator, Air Cleaner	1
56	45.132200.03	Stepper Motor, Choke Valve	1
57	85.220005.02	Protective Cover, Control Unit, Engine	1
58	2.08.121	Flange Bolt M10 x 65	1
59	1.5789.0840	Flange Bolt M8 x 40	1
60	25.040013.00	Lifter, Valve	2
61	2.04.001	Dowel Pin Ø9 x 14	2
62	27.041000.00	Camshaft	1
63	2.14.012	Woodruff Key 4 x 7.5 x 19	1
64	2.08.037	Drain Bolt M10 x 1.25 x 25	1
65	27.050005.00.1	Piston	1
66	23.050003.00	Pin, Piston	1
67	2.09.001	Circlip Ø18 x Ø1	2
68	27.050303.00	Ring, Oil	1
69	27.050302.00	Ring, Second Piston	1
70	27.050301.00	Ring, First Piston	1
71	27.030009.01	Gasket, Cylinder Head	1
72	2.04.003	Dowel Pin Ø10 x 14	2
73	23.040002.02	Valve, Intake	1
74	23.040006.02	Valve, Exhaust	1
75	85.080200.01	Air Shroud, Cylinder	1
76	2.15.002(F6RTC)	Spark Plug F6RTC	1

#	Part Number	Description	Qty.
77	1.5789.0865	Flange Bolt M8 x 65	3
78	23.040017.00	Oil Seal, Valve, Steel	2
79	21.040003.00	Spring, Valve	2
80	21.040007.00	Retainer, Exhaust Valve Spring	1
81	21.040001.00	Retainer, Intake Valve Spring	1
82	21.040008.00	Rotator, Exhaust Valve	1
83	24.040202.00	Shaft, Rocker Arm	1
84	22.040009.00	Rocker Arm	2
85	22.040012.00	Screw, Valve Adjustment	2
86	21.040021.00	Nut M6 x 0.5, Lock	2
87	1.97.1.06	Washer Ø6	2
88	1.6177.1.06	Lock Nut M6, Flange	2
89	27.125000.01	Starter Motor Assembly	1
90	24.040201.00	Retainer, Rocker Arm	1
91	23.040010.00	Bolt, Rocker Arm	2
92	27.040005.00	Push Rod	2
93	21.020002.01	Gasket, Cylinder Head Cover	1
94	24.021000.00	Cover, Cylinder Head	1
95	23.020001.02	Breather Tube, 112 + 35 mm	1
96	27.131017.01	Main Jet, Standard	1
	27.131017.01.01	Main Jet, Altitude	/
97	1.6177.1.05	Lock Nut M5, Flange	3
98	27.125100.00	Starter Motor	1
99	23.125000.03	Relay, Starter, Three Gear	1
100	85.130006.04	Support 20mm, Support plate	1
101	85.130006.03	Support 15mm, Support plate	2
102	85.130005.03	Support, Stepper Motor	1
103	1.6177.1.04.2	Lock Nut M4, Flange	3
104	1.5789.0629	Flange Bolt M6 x 29	1
105	2.04.005	Dowel Pin Ø8 x 10	2
106	1.93.05	Lock Washer Ø5	2
107	1.16674.0516	Flange Bolt M5 x 16	2
108	24.040200.00	Rocker Arm Assembly	1
109	2.05.001	Clamp, (Ø8 x 6.5)	2
110	27.010000.00	Cylinder Head Assembly	1
111	2.08.166	Flange Bolt M5×12	4

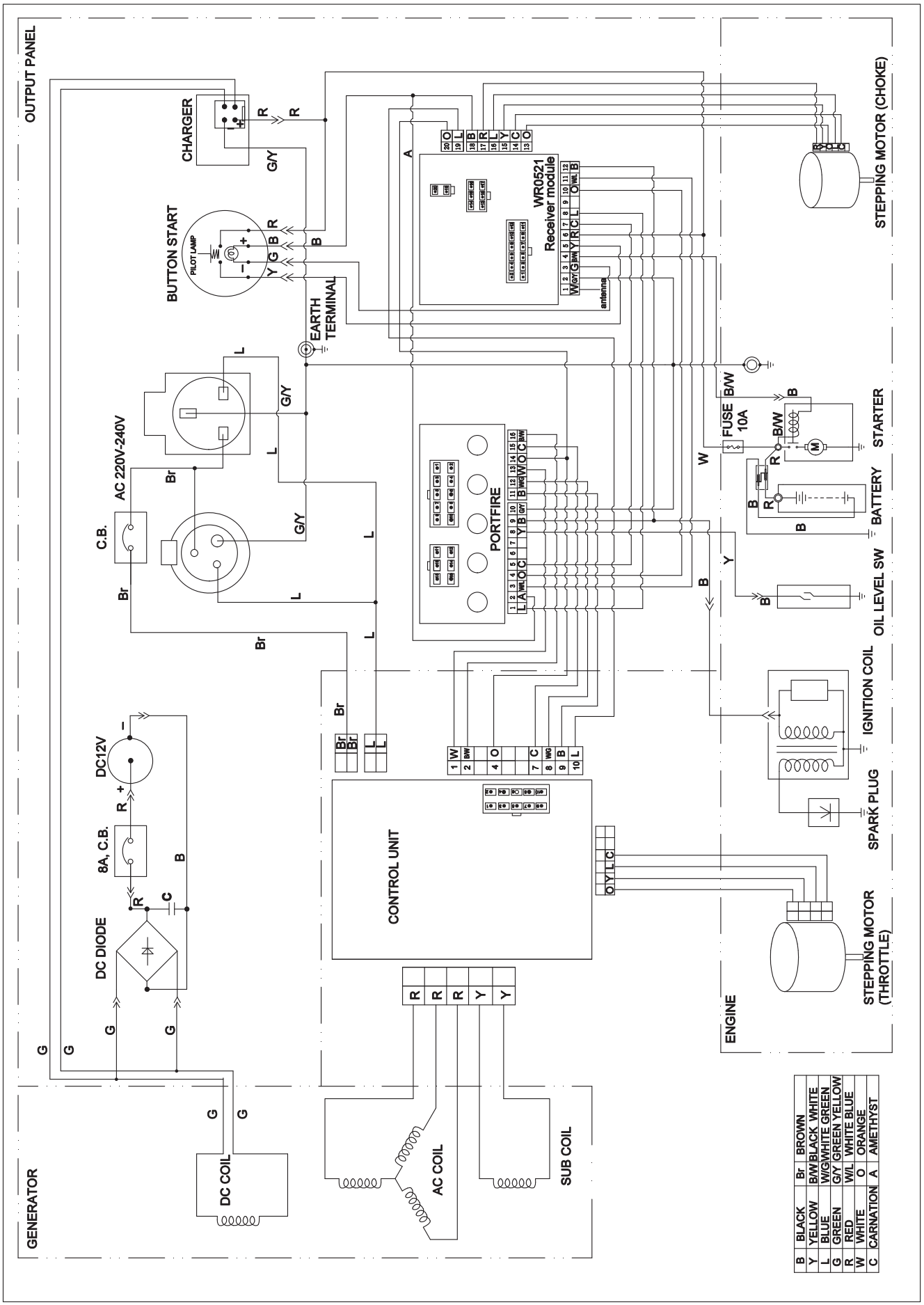
OUTPUT PANEL
CHARGER
BUTTON START
PILOT LAMP
EARTH TERMINAL
WR0521 Receiver module
antenna
STEPPING MOTOR (CHOKE)
AC 220V-240V
C.B.
PORTFIRE
FUSE 10A
STARTER
BATTERY
OIL LEVEL SW
IGNITION COIL
SPARK PLUG
DC12V
8A, C.B.
DC DIODE
CONTROL UNIT
STEPPING MOTOR (THROTTLE)
ENGINE
GENERATOR
DC COIL
AC COIL
SUB COIL
B BLACK
Y YELLOW
L BLUE
G GREEN
R RED
W WHITE
C CARNATION
Br BROWN
B/W BLACK WHITE
W/G WHITE GREEN
G/Y GREEN YELLOW
W/L WHITE BLUE
O ORANGE
A AMETHYST

TROUBLESHOOTING

Problem	Cause	Solution
Engine will not start.	No fuel.	Add fuel.
	Faulty spark plug.	Clean and adjust spark plug or replace.
	Low oil level.	Fill crankcase to the proper level.
		Place generator on a flat, level surface.
	Spark plug wire loose.	Attach wire to spark plug.
	Fuel valve is closed.	Open fuel valve.
	START/STOP button in “OFF” mode.	Press START/STOP button to “STANDBY” mode then again to “Start” or see manual start section.
	Old fuel or water in fuel.	Drain fuel and replace with fresh fuel.
	Flooded with fuel.	Let unit stand for 10 mins.
Engine starts but runs roughly.	Choke in the wrong position.	Move choke until it stops under RUN position or push choke button if illuminated green.
	Dirty air filter.	Clean or replace air filter.
	Dirty fuel valve.	Clean the fuel valve.
	Clogged spark arrestor.	Clean spark arrestor.
Engine will not start wirelessly.	Remote control battery is dead.	Replace remote control battery.
	Generator battery is dead.	Recharge generator battery.
	START/STOP button in “OFF” mode.	Press START/STOP button to “STANDBY” mode then press “START” one time on remote.
	Generator out of range of remote signal.	Remote must be with 80 feet of generator.
	Obstructions in between generator and remote.	Clear line of site between generator and remote.
Engine will not start electrically.	Generator battery is dead.	Recharge generator battery.
	START/STOP button in “OFF” mode.	Press START/STOP button to “STANDBY” mode then again to “START”.
Engine shuts down during operation.	Out of fuel.	Fill fuel tank.
	Low oil level.	Fill crankcase to the proper level. Place generator on a flat, level surface.
	Clogged spark arrestor.	Clean spark arrestor.
Generator cannot supply enough power or overheating.	Generator is overloaded.	Review load and adjust. See “Connecting Electrical Loads.”
	Dirty air filter.	Clean or replace air filter.
	Choke in wrong position.	Move choke until it stops under RUN position or push choke button if illuminated green.
Engine is running but no AC output.	Poor cord connection.	Check all connections.
	Circuit breaker is open.	Reset circuit breaker.
	Faulty inverter module.	Call Technical Support Team.
	Loose wiring.	Inspect and tighten wiring connections.
	AC Overload: Button illuminated red	Reduce AC load and press Overload Reset Button until illuminated green.
	Other.	Contact the help line.

Problem	Cause	Solution
Engine hunts or falters.	Engine governor defective.	Contact the help line.
	Dirty fuel valve.	Clean the fuel valve.
	Carburetor is dirty and running lean.	Contact the help line.
	Choke in wrong position.	Move choke until it stops under RUN position or push choke button if illuminated green.
Repeated circuit breaker tripping.	Overload.	Review load and adjust. See “Connecting Electrical Loads.”
	Faulty power cords or device.	Check for damaged, bare or frayed wires. Replace defective device.
	Circuit breaker still too hot.	Let unit sit for 5 mins.

WARRANTY*

CHAMPION POWER EQUIPMENT
3 YEAR LIMITED WARRANTY

Warranty Qualifications

To register your product for warranty and FREE lifetime call center technical support please visit:
https://www.championpowerequipment.co.uk
To complete registration you will need to include a copy of the purchase receipt as proof of original purchase. Proof of purchase is required for warranty service. Please register within ten (10) days from date of purchase.

Repair/Replacement Warranty

CPE warrants to the original purchaser that the mechanical and electrical components will be free of defects in material and workmanship for a period of three (3) years for domestic usage and One (1) Year for commercial and industrial use. Transportation charges on product submitted for repair or replacement under this warranty are the sole responsibility of the purchaser.
This warranty only applies to the original purchaser and is not transferable. For full T&C's please visit www.championpowerequipment.co.uk.

Do Not Return The Unit To The Place Of Purchase

Contact CPE's Technical Service and CPE will troubleshoot any issue via phone or e-mail. If the problem is not corrected by this method, CPE will, at its option, authorize evaluation, repair or replacement of the defective part or component at a CPE Service Center. CPE will provide you with a case number for warranty service. Please keep it for future reference. Repairs or replacements without prior authorization, or at an unauthorized repair facility, will not be covered by this warranty.

Warranty Exclusions

This warranty does not cover the following repairs and equipment:

Normal Wear

Products with mechanical and electrical components need periodic parts and service to perform well. This warranty does not cover repair when normal use has exhausted the life of a part or the equipment as a whole.

Installation, Use and Maintenance

This warranty will not apply to parts and/or labor if the product is deemed to have been misused, neglected, involved in an accident, abused, loaded beyond the product's limits, modified, installed improperly or connected incorrectly to any electrical component. Normal maintenance is not covered by this warranty and is not required to be performed at a facility or by a person authorized by CPE.

Other Exclusions

This warranty excludes:

- Cosmetic defects such as paint, decals, etc.
- Wear items such as filter elements, o-rings, etc.
- Accessory parts such as starting batteries, and storage covers.
- Failures due to acts of God and other force majeure events beyond the manufacturer's control.
- Problems caused by parts that are not original Champion Power Equipment parts.

When applicable, this warranty does not apply to products used for prime power in place of a utility.

Limits of Implied Warranty and Consequential Damage

Champion Power Equipment disclaims any obligation to cover any loss of time, use of this product, freight, or any incidental or consequential claim by anyone from using this product.
THIS WARRANTY AND THE ATTACHED U.S. EPA and/or CARB EMISSION CONTROL SYSTEM WARRANTIES (WHEN APPLICABLE) ARE IN LIEU OF ALL OTHER WARRANTIES, EXPRESS OR IMPLIED, INCLUDING WARRANTIES OF MERCHANTABILITY OR FITNESS FOR A PARTICULAR PURPOSE.

A unit provided as an exchange will be subject to the warranty of the original unit. The length of the warranty governing the exchanged unit will remain calculated by reference to the purchase date of the original unit.

This warranty gives you certain legal rights which may change from state to state or province to province. Your state or province may also have other rights you may be entitled to that are not listed within this warranty.

Contact Information

Winch Solutions ltd
Unit 17-18 Bradley Trading Estate
Standish WN6 0XQ / UK
www.championpowerequipment.co.uk
support@cpeeurope.co.uk