EXCEL POWER GENERATORS

OWNER'S MANUAL

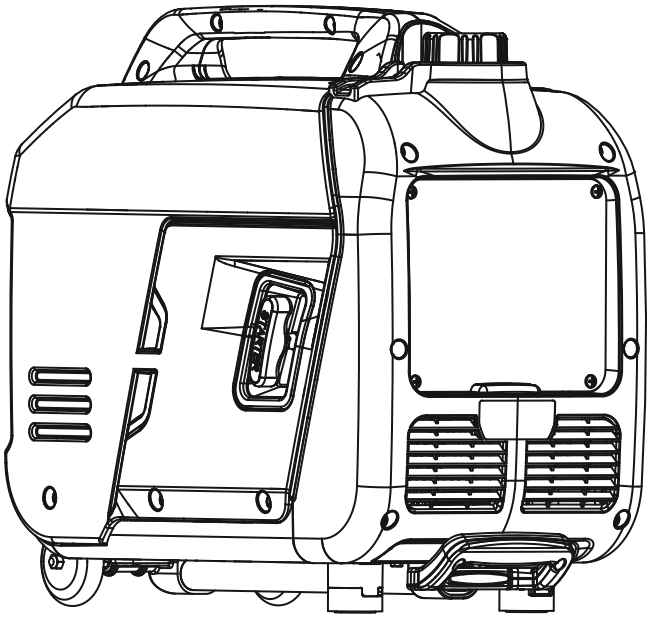

SAVE THIS MANUAL FOR FUTURE REFERENCE

IMPORTANT SAFETY INSTRUCTIONS ARE INCLUDED IN THIS MANUAL

TABLE OF CONTENTS

Specifications 1
Safety Information 2
Important Safety Instructions 3
Generator Safety Warnings 8
Know Your Generator 11
Generator Preparation 16
Starting the Generator 19
Shutting Off the Generator 21
Maintenance 22
Transportation & Storage 27
Troubleshooting Guide 28

KEY SPECIFICATIONS

Model NO.	**XL3500i**
Starting Wattage	3200W
Running Wattage	3000W
Phase	Single
Frequency	50Hz
Voltage	AC 230V
Amperage	13A
Engine Type	4-stroke, OHV, single cylinder with forced air cooling system
Engine Displacement	149cc
Fuel Tank Capacity	6.0 L, 87 octane minimum
Oil Capacity	0.45 L
100% Load Running Time	3.5h
50% Load Running Time	5.5h
Noise Level	65dB@1/4 load

NOTICE: We are always working to improve our products. Therefore, final product may vary from images shown. We reserves the right to change features, specifications without notice for further improvements of products.

SAFETY INFORMATION

⚠ **WARNING:** Before operating the generator, make sure to read all safety warnings and all instructions. Failure to follow the warnings and instructions may result in electric shock, fire or serious injury.

SAFETY INTRODUCTION

Safety is a combination of common sense, staying alert, and knowing how your tool works. This manual contains important information regarding the generator's potential safety concerns, as well as preparation, operation, and maintenance instructions. Before operating this generator, be sure to read and observe all warnings and instructions both on the generator labels and in this instruction manual. Failure to follow all instructions listed below may result in personal injury.

NOTE: The following safety information is not meant to cover all possible conditions and situations that may occur. AIPOWER reserves the right to change this product and specifications at any time without prior notice.

SAVE THESE INSTRUCTIONS - Please keep this manual available to all users during the entire life of the tool. Review it frequently to maximize safety for both yourself and others.

SAFETY SYMBOLS

The purpose of following safety symbols is to attract your attention to possible dangers. The safety symbols, and their explanations, deserve your careful attention and understanding. The safety warnings do not by themselves eliminate any danger. The instructions or warnings they give are not substitutes for proper accident prevention measures.

⚠ DANGER: indicates a hazard, which, if not avoided, will result in death or serious injury.

⚠ WARNING: indicates a hazard, which, if not avoided, could result in death or serious injury.

⚠ CAUTION: indicates a hazard, which, if not avoided, might result in minor or moderate injury.

CAUTION: when used without the alert symbol, indicates a situation that could result in damage to the machine.

NOTICE REGARDING EMISSIONS

Engines that are certified to comply with U.S. EPA emission regulations for SORE (Small Off Road Equipment), are certified to operate on regular unleaded gasoline, and may include the following emission control systems: (EM) Engine Modifications and (TWC) Three-Way Catalyst (if so equipped).

⚠ California Proposition 65 WARNING: This product contains chemicals and produces exhaust known to the State of California to cause cancer, birth defects and other reproductive harm.

IMPORTANT SAFETY INSTRUCTIONS

SAFETY PRECAUTIONS

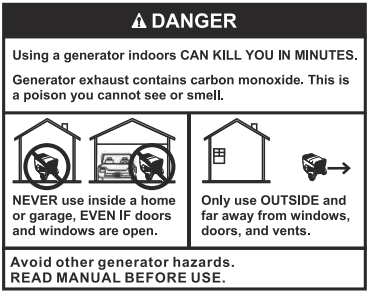

⚠ WARNING

POISONOUS GAS HAZARD.



Engine exhaust contains carbon monoxide, a poisonous gas that could kill you in minutes. You **CANNOT** smell it, see it, or taste it. Even if you do not smell exhaust fumes, you could still be exposed to carbon monoxide gas.

- Operate this product **ONLY** outside far away from windows, doors and vents to reduce the risk of carbon monoxide gas from accumulating and potentially being drawn towards occupied spaces.
- Install battery-operated carbon monoxide alarms or plug-in carbon monoxide alarms with battery back-up according to the manufacturer's instructions. Smoke alarms cannot detect carbon monoxide gas.
- **DO NOT** run this product inside homes, garages, basements, crawlspaces, sheds, or other partially-enclosed spaces even if using fans or opening doors and windows for ventilation. Carbon monoxide can quickly build up in these spaces and can linger for hours, even after this product has shut off.
- **ALWAYS** place this product downwind and point the engine exhaust away from occupied spaces. If you start to feel sick, dizzy, or weak while using this product, shut it off and get to fresh air RIGHT AWAY. See a doctor. You may have carbon monoxide poisoning.

⚠ WARNING

The engine exhaust from this product contains chemicals known to the State of California to cause cancer, birth defects, or other reproductive harm.

⚠ WARNING

Certain components in this product and related accessories contain chemicals known to the State of California to cause cancer, birth defects or other reproductive harm. Wash hands after handling.

- If you start to feel sick, dizzy or weak while using the portable generator, you may have carbon monoxide poisoning. Get out side to fresh air immediately and call 911 for emergency medical attention. Very high levels of CO can rapidly cause victims to lose consciousness before they can rescue themselves. DO NOT attempt to shut off the generator before moving to fresh air. Entering an enclosed space where a generator is or has been running may put you at greater risk of CO poisoning.

IMPORTANT SAFETY INSTRUCTIONS

CORRECT USAGE

WARNING

Example location to reduce risk of carbon monoxide poisoning

- ONLY use outside and downwind, far away from windows, doors and vents.
- Direct exhaust away from occupied spaces.

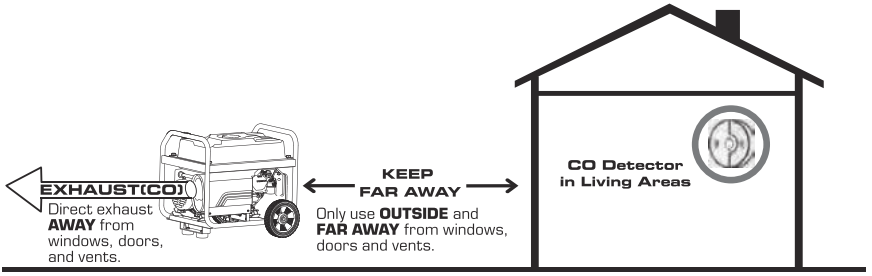

INCORRECT USAGE

WARNING

Do not operate in any of the following locations:

Near any door, window or vent
Garage
Basement
Crawl Space
Living Area
Attic
Entry Way
Porch
Mudroom

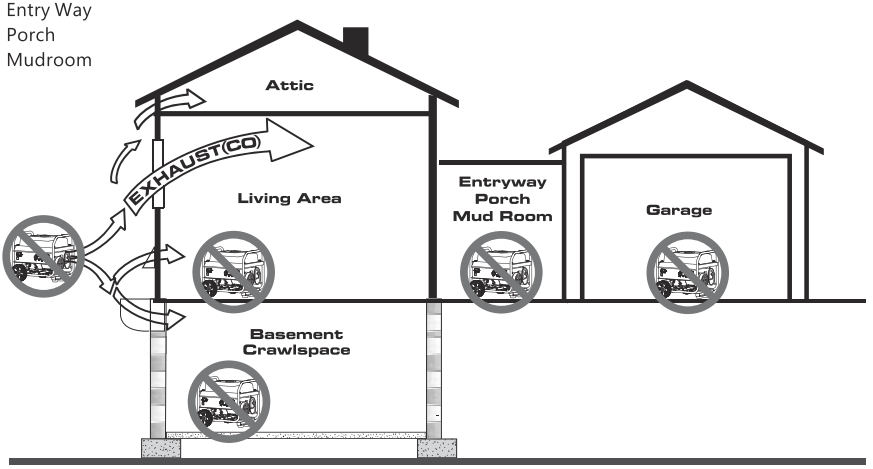

IMPORTANT SAFETY INSTRUCTIONS

WARNING



Starter cord kickback (rapid retraction) will pull hand and arm toward engine faster than you can let go which could cause broken bones, fractures, bruises, or sprains resulting in serious injury.

- When starting engine, pull cord slowly until resistance is felt and then pull rapidly to avoid kickback.
- **NEVER** start or stop engine with electrical devices plugged in and turned on.

WARNING



Fuel and its vapors are extremely flammable and explosive which could cause burns, fire, or explosion resulting in death or serious injury and/or property damage.

WHEN ADDING OR DRAINING FUEL

- Turn generator engine OFF and let it cool at least 2 minutes before removing fuel cap. Loosen cap slowly to relieve pressure in tank.
- Fill or drain fuel tank outdoors.
- **DO NOT** overfill tank. Allow space for fuel expansion.
- If fuel spills, wait until it evaporates before starting engine.
- Keep fuel away from sparks, open flames, pilot lights, heat, and other ignition sources.
- Check fuel lines, tank, cap, and fittings frequently for cracks or leaks. Replace if necessary.
- **DO NOT** light a cigarette or smoke.

WHEN STARTING EQUIPMENT

- Ensure spark plug, muffler, fuel cap, and air cleaner are in place.
- **DO NOT** crank engine with spark plug removed.

WHEN OPERATING EQUIPMENT

- **DO NOT** operate this product inside any building, carport, porch, mobile equipment, marine applications, or enclosure.
- **DO NOT** tip engine or equipment at angle which causes fuel to spill.
- **DO NOT** stop engine by moving choke control to "Start" position.

WHEN TRANSPORTING, MOVING OR REPAIRING EQUIPMENT

- Transport/move/repair with fuel tank EMPTY or with fuel shutoff valve OFF.
- **DO NOT** tip engine or equipment at angle which causes fuel to spill.
- Disconnect spark plug wire.

WHEN STORING FUEL OR EQUIPMENT WITH FUEL IN TANK

- Store away from furnaces, stoves, water heaters, clothes dryers, or other appliances that have pilot light or other ignition source because they could ignite fuel vapors.

WARNING

- This generator does not meet U. S. Coast Guard Regulation 33CFR-183 and should not be used on marine applications.
- Failure to use the appropriate U. S. Coast Guard approved generator could result in death or serious injury and/or property damage.

WARNING



Generator voltage could cause electrical shock or burn resulting in death or serious injury.

- Use approved transfer equipment, suitable for the intended use, to prevent backfeed by isolating generator from electric utility workers.

IMPORTANT SAFETY INSTRUCTIONS

- When using generator for backup power, notify utility company.
- Use a ground fault circuit interrupter (GFCI) in any damp or highly conductive area, such as metal decking or steel work.
- **DO NOT** touch bare wires or receptacles.
- **DO NOT** use generator with electrical cords which are worn, frayed, bare or otherwise damaged.
- **DO NOT** operate generator in the rain or wet weather.
- **DO NOT** handle generator or electrical cords while standing in water, while barefoot, or while hands or feet are wet.
- **DO NOT** allow unqualified persons or children to operate or service generator.

WARNING



Exhaust heat/gases could ignite combustibles, structures or damage fuel tank causing a fire, resulting in death or serious injury and/or property damage.
Contact with muffler area could cause burns resulting in serious injury.

- **DO NOT** touch hot parts and **AVOID** hot exhaust gases.
- Allow equipment to cool before touching.
- It is a violation of California Public Resource Code, Section 4442, to use or operate the engine on any forest-covered, brush-covered, or grass-covered land unless the exhaust system is equipped with a spark arrester, as defined in Section 4442, maintained in effective working order. Other states or federal jurisdictions may have similar laws. Contact the original equipment manufacturer, retailer, or dealer to obtain a spark arrester designed for the exhaust system installed on this engine.
- Replacement parts must be the same and installed in the same position as the original parts.

WARNING



Unintentional sparking could cause fire or electric shock resulting in death or serious injury.

WHEN ADJUSTING OR MAKING REPAIRS TO YOUR GENERATOR

- Disconnect the spark plug wire from the spark plug and place the wire where it cannot contact spark plug.

WHEN TESTING FOR ENGINE SPARK

- Use approved spark plug tester.
- **DO NOT** check for spark with spark plug removed.

WARNING



Starter and other rotating parts could entangle hands, hair, clothing, or accessories resulting in serious injury.

- **NEVER** operate generator without protective housing or covers.
- **DO NOT** wear loose clothing, jewelry or anything that could be caught in the starter or other rotating parts.
- Tie up long hair and remove jewelry.

WARNING

Excessively high operating speeds could result in minor injury. Excessively low operating speeds impose a heavy load.

- **DO NOT** tamper with governor spring, links or other parts to increase engine speed. Generator supplies correct rated frequency and voltage when running at governed speed.
- **DO NOT** modify generator in any way.

NOTE:

Exceeding generators wattage/amperage capacity could damage generator and/or electrical devices connected to it.

- DO NOT exceed the generator's wattage amperage capacity.
- Start generator and let engine stabilize before connecting electrical loads.
- Connect electrical loads in OFF position, then turn ON for operation.
- Turn electrical loads OFF and disconnect from generator before stopping generator.

IMPORTANT SAFETY INSTRUCTIONS

NOTE:

Improper treatment of generator could damage it and shorten its life.

- Use generator only for intended uses.
- If you have questions about intended use, ask dealer or contact local service center.
- Operate generator only on level surfaces.
- DO NOT expose generator to excessive moisture, dust, dirt, or corrosive vapors.
- DO NOT insert any objects through cooling slots.
- If connected devices overheat, turn them off and disconnect them from generator.
- Shut off generator if:
  -Electrical output is lost.
  -Equipment sparks, smokes, or emits flames.
  -Unit vibrates excessively.



Medical and Life Support Uses.

- In case of emergency, call 911 immediately.
- NEVER use this product to power life support devices or life support appliances.
- NEVER use this product to power medical devices or medical appliances.
- Inform your electricity provider immediately if you or anyone in your household depends on electrical equipment to live.
- Inform your electrical provider immediately if a loss of power would cause you or anyone in your household to experience a medical emergency.

GENERATOR SAFETY WARNINGS

⚠ DANGER: CARBON MONOXIDE

Using a generator indoors CAN KILL YOU IN MINUTES. Generator exhaust contains carbon monoxide (CO). This is a poison gas you cannot see or smell. If you can smell the generator exhaust, you are breathing CO. But even if you cannot smell the exhaust, you could be breathing CO.



NEVER use a generator inside homes, garages, crawl spaces, or other partially enclosed areas. Deadly levels of carbon monoxide can build up in these areas. Using a fan or opening windows and doors does NOT supply enough fresh air. ONLY use a generator OUTSIDE and far away from windows, doors, and vents. These openings can pull in generator exhaust.

Even if you use a generator correctly, CO may leak into the home. ALWAYS use a battery-powered or battery-backup CO alarm in the home. If you start to feel sick, dizzy, or weak after the generator has been running, move to fresh air RIGHT AWAY. See a doctor. You may have carbon monoxide poisoning.

⚠**WARNING**: RISK OF EXPLOSION. HIGHLY FLAMMABLE: This generator may emit highly flammable and explosive gasoline vapors, which can cause severe burns or even death, if ignited. A nearby open flame can lead to explosion even if not directly in contact with gasoline.

- Do not operate near open flame, heat, or any other ignition source. Do not smoke near generator.
- Always operate on a firm, level surface.
- Always turn generator off before refueling. Allow generator to cool for at least 2 minutes before removing fuel cap. Loosen cap slowly to relieve pressure in tank.
- Do not overfill fuel tank. Gasoline may expand during operation. Do not fill to the top of the tank. Allow for expansion. Always check for spilled fuel before operating.
- If fuel spills, move the generator at least 30 feet away from the spill and wipe clean any spilled fuel before starting the engine.
- Empty fuel tank before storing or transporting the generator.

⚠**WARNING**: If this generator is used as a supply for a BUILDING'S WIRING SYSTEM, the generator MUST be installed by a qualified electrician and connected to a transfer switch as a separately derived system in accordance with all applicable laws and electrical codes and the National Electrical Code, NFPA 70. The generator shall be connected to a transfer switch that switches all conductors excluding the equipment grounding conductor. The frame of the generator shall be connected to an approved grounding electrode.

GENERATOR SAFETY WARNINGS

⚠ **WARNING:** Do not let comfort or familiarity with the product replace strict adherence to product safety rules. Failure to follow the safety instructions may result in serious personal injury.

OPERATING ENVIRONMENT

1. Using a generator indoors can kill you in minutes. Only use a generator OUTSIDE and far away from windows, doors and vents.

2. Do not smoke near the generator.

3. Do not operate near open flame, heat, or flammable materials. This generator may emit highly flammable and explosive gasoline vapors, which can cause severe burns or even death if ignited. A nearby open flame can lead to an explosion even if it isn't directly in contact with gasoline.

4. Do not expose the generator to rainy or wet conditions; doing so significantly increases the risk of electrical shock. Never handle the generator, electronic devices, or any cord while standing in water, while barefoot, or when hands or feet are wet.

5. Always operate the generator on a dry, firm, level surface.

6. The generator should have at least 5 feet of clearance from buildings or other equipment during operation.

7. Do not allow children or non-qualified persons to operate the generator.

GENERATOR PREPARATION

1. Always ground the generator before using it to maximize safety (see "GROUND THE GENERATOR" section.

2. Do not overfill fuel tank, as gasoline may expand during operation. Do not fill to the very top of the tank. Leave room for gasoline expansion. Always check for spilled fuel before operating.

3. If any part of the generator, electrical device or power cord is broken, damaged, or defective, make sure it is repaired or replaced before operation. Service should only be performed by a qualified technician. Do not use receptacles or cords that show signs of damage, such as broken or cracked insulation.

4. Use a ground fault circuit interrupter (GFCI) in highly conductive areas such as metal decking or steel work. Extension cords with in-line GFCIs are recommended for these operations to maximize safety.

5. If connecting the generator to a building's electrical system for standby power, you MUST consult a qualified electrician and install a transfer switch. Such connections must comply with local electrical laws and codes. Failure to comply can create a back-feed, which may result in serious injury or death to utility workers.

6. Never modify the generator in any way. Modifying or using the machine for any other purpose for which it is not designed may result in serious injuries, machine damage and voiding of the warranty.

GENERATOR SAFETY WARNINGS

GENERATOR OPERATION

1. Only use the generator for its intended purposes. Modifying or using the generator for operations for which it was not designed may cause hazards and personal injury.

2. Do not touch bare wires or receptacles (outlets).

3. Do not exceed the wattage capacity of the generator by plugging in more electrical devices than the unit can handle. This could damage the generator and/or connected electrical devices. Check the operating voltage and frequency requirements of all electrical devices prior to plugging them into the generator.

4. Allow generator to run for several minutes before connecting electrical devices. Do not start or stop engine with electrical devices plugged in to the receptacles. Failure to do so could damage the generator and / or connected electrical devices.

5. Do not turn ON electrical devices until after they are connected to the generator.

6. Generators vibrate in normal use. During and after the use of the generator, inspect both the generator as well as extension and power supply cords for damage resulting from vibration.

7. Do not touch HOT PARTS. This generator produces heat when running. Temperatures near exhaust can exceed 150º F (65º C). Allow generator to cool down after use before touching engine or areas of the generator that become hot during use.

8. Turn off all connected electrical devices before stopping the generator.

9. Always turn generator off before refueling. Allow generator to cool for at least 2 minutes before removing fuel cap. Loosen cap slowly to relieve pressure in tank.

10. Turn the engine switch to “OFF” position when the engine is not running.

11. Empty fuel tank before storing or transporting the generator. Do not store generator or gasoline near furnaces, water heaters, or any other appliances that produce heat or have automatic ignitions. Store the generator and fuel away from sparks, open flames, pilot lights, heat and other sources of ignition.

12. Always wash hands after handling generator.

CAUTION: Misuse of this generator can damage it or shorten its lifespan.

TO MAXIMIZE THE LIFESPAN OF YOUR GENERATOR:
We recommend running your generator at least once a month for 20 to 30 minutes. Start the generator according to the instructions and plug a small load in to make sure the outlet is producing electricity. If you do not run it often, it will greatly shorten the generator’s lifespan and void the warranty.

KNOW YOUR GENERATOR

GENERATOR

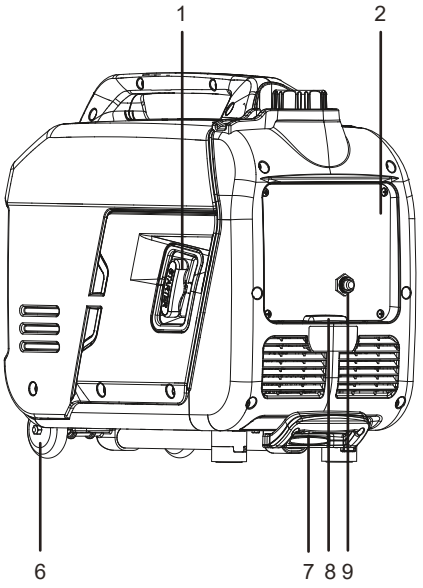

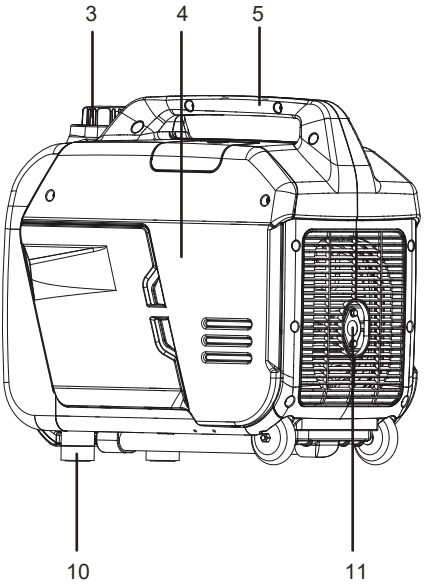

1 - Recoil Starter

2 - Control Panel

3 - Fuel Cap

4 - Maintenance Cover

5 - Carrying Handle

6 - Wheel

7 - Telescopic Handle

8 - Panel LED Light

9 - LPG Inlet

10 - Support Leg

11 - Muffler/Spark Arrester

KNOW YOUR GENERATOR

CONTROL PANEL

6. Indicator Light

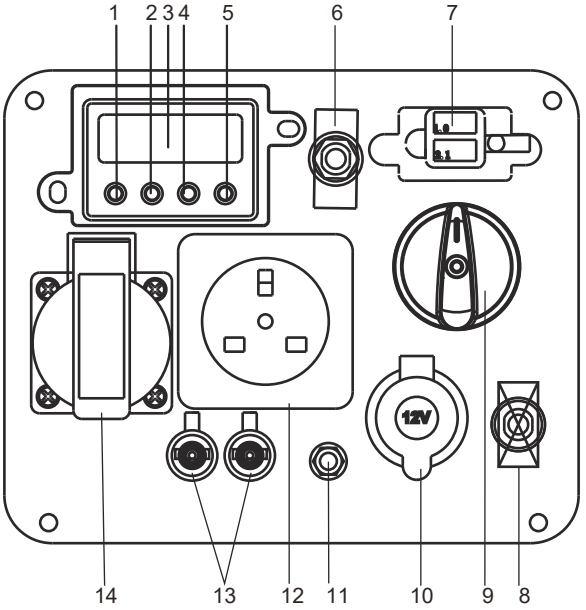

1.Operation button and eco indicator

2.Oil alarm lamp

3.Monitor

4.Overload indicator and rest button

5.Display toggle button

6.Circuit breaker(AC)

7.DC 5V USB

8.Circuit breaker(DC)

9.Fuel switch

10.DC socket

11.Grounding terminal

12.AC 230V receptacle

13.Parallel operation outlets

14.AC 230V receptacle

KNOW YOUR GENERATOR

LOW IDLE SWITCH

This generator is equipped with an LOW IDLE Switch (Fig. 1). Engaging this switch allows the system to regulate the engine speed and automatically adjust its fuel consumption to match the required load. When the electrical load changes, the generator engine will automatically speed up and slow down as needed. This reduces fuel consumption and noise levels, while extending runtime and engine's lifespan.

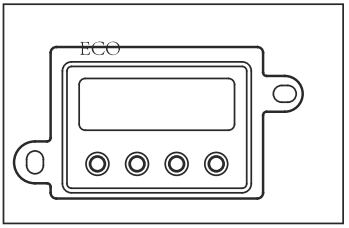

Keep this switch engaged ONLY when the power load requirement is LESS THAN 75% of the rated watts. Do not engage the switch when the total load is more than 75% of the rated watts. The generator engine must run at full speed to supply power for anything over 75% of the rated watts.

PARALLEL OPERATION

The parallel operation outlets (Fig. 2) allow you to connect two same generators with a special Parallel Operation Kit to increase the total available electrical power. The Parallel Operation Kit can be purchased. Follow the instructions included with your parallel operation kit for proper installation and operation.

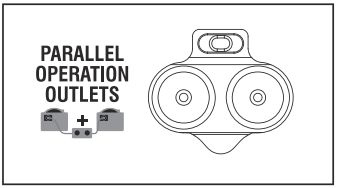

CIRCUIT BREAKERS

The circuit breakers (Fig. 3) protect the individual AC and DC circuits. The circuit breaker will activate when the outlets exceed. When the circuit breaker activates, turn off and disconnect the device from its respective outlet, and press the circuit breaker to reset.

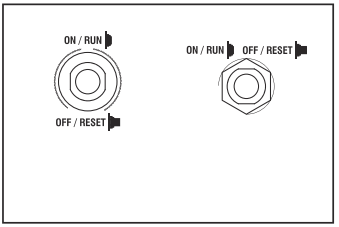

CONNECTING ELECTRICAL DEVICES

CAUTION: Before connecting devices, become familiar with the markings on the control panel before connecting electrical devices. The 230V AC receptacles are for connecting electrical devices that run on 230V, 50 Hz, single phase, AC current. DO NOT connect 60 Hz or 3-phase loads to the generator.

Follow the steps below to properly connect your device(s) to the generator:

1. Before connecting electrical devices, allow the generator to run for a few minutes to stabilize the speed and voltage output.

2. Select the device with the highest wattage, and make sure it is turned off. Plug the device into the generator and then turn the device on. Allow the engine to stabilize.

3. Repeat step 2 to plug in each additional device. DO NOT attempt to plug in or start multiple devices at the same time.

KNOW YOUR GENERATOR

GENERATOR CAPACITY

Make sure the generator can supply enough running (rated) and starting (max.) watts for the items you will power at the same time. Follow these simple steps.

1. Select the items you will power at the same time.
2. Total the running (rated) watts of these items. This is the amount of power the generator must produce to keep the items running.
3. Estimate how many starting (max.) watts you will need. Sarting wattage is the short burst of power needed to start electric motor-driven tools or appliances such as a circular saw or refrigerator. Because not all motors start at the same time, total starting (max.) watts can be estimated by adding only the item(s) with the highest additional starting (max.) to the total rated watts.

Example:

Tool or Appliance	Running Watts*	Additional Starting Watts*
Refrigerator	700	1350
Portable Fan	40	120
Laptop	250	250
46 in. Flat Panel Television	190	190
Light (75 Watts)	75	75
	1255 Total Running Watts	1350 Highest Starting Watts

Total Running Watts	1255
Highest Starting Watts	+ 1350
Total Starting Watts Needed	2605

To prolong the life of the generator and attached devices, it is important to take care when adding electrical loads to the generator. There should be nothing connected to the generator outlets before starting its engine. The correct and safe way to manage generator power is to sequentially add loads as follows:

1. With nothing connected to the generator, start the engine as described later in this manual.
2. Plug in and turn on the first load, preferably the largest load you have.
3. Permit the generator output to stabilize (engine runs smoothly and attached device operates properly).
4. Plug in and turn on the next load.
5. Again, permit the generator to stabilize.
6. Repeat steps 4 and 5 for each additional load.

Never add more loads than the generator capacity. Take special care to consider surge loads in generator capacity as previously described.

NOTICE:
Do not overload the generator's capacity. Exceeding the generator's wattage/amperage capacity may damage the generator and/or electrical devices connected to it.

KNOW YOUR GENERATOR

The chart below serves as a reference for the estimated wattage requirements of common electrical devices. However, do not solely rely on this chart - all electronics and appliances are built differently. Always check the wattage listed on the electrical device before consulting this chart.

Tool or Appliance	Rated (Running) Watts	Surge (Starting) Watts
Hot plate	2500	0
Electric stove (each element)	1500-2800	0
Saw - circular	1500	1500
Window air conditioner	1200	1800
Saw - miter	1200	1200
Microwave	1000	0
Well water pump	1000	1000
Sump pump	800	1200
Refrigerator freezer	800	1200
Furnace blower	800	1300
Computer	800	0
Electric drill	600	900
Television	500	0
Stereo	400	0
Box fan	300	600
Security system	180	0
Common light bulb	75	0

GENERATOR PREPARATION

The following section describes the necessary steps to prepare the generator for use. Failure to perform these steps properly can damage the generator or shorten its life.

STEP 1 - ADD/CHECK OIL

The generator is shipped without oil. User must add the proper amount of oil before operating the generator for the first time. The oil capacity of the engine crankcase is **15.0 fl. oz. (0.45 L).**

To add oil, follow these steps:

1. Place the generator on a level surface. Make sure the engine is OFF before adding or checking oil.

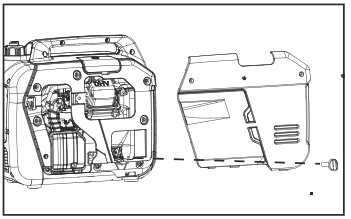

CAUTION: Keep the generator level! Tilting the generator to assist in filling will cause oil to flow into the wrong areas of the engine and cause damage.

2. Unscrew the two knobs, and remove the maintenance cover from the side panel (Fig. 3). Unscrew the oil dipstick from the engine.

3. Using an oil funnel or appropriate dispenser, slowly add oil into the oil fill (Fig. 4), being careful not to overfill the unit. Fill the crankcase to the upper fill line so you can visually see the oil coming halfway up the oil fill threads (Fig. 5).

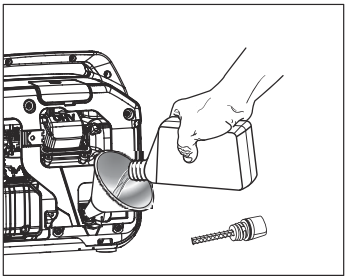

4. Reinstall the oil dipstick and firmly tighten it. Wipe clean any spilled oil.

5. Reinstall the maintenance cover. Turn the two knobs to the locked position to secure the cover in place.

NOTE: Used engine oil should be disposed of at an approved disposal site. See local retailer for more information.

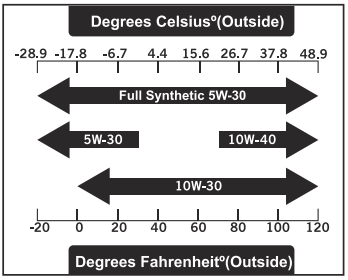

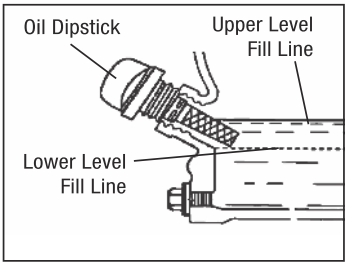

GENERATOR PREPARATION

For subsequent operation, the oil level should be checked before each use, or after every 8 hours of operation. The generator is equipped with a low-oil sensor and will NOT start without a sufficient amount of oil.

To check oil level (before every subsequent start):

1. Place the generator on a level surface. Make sure the engine is OFF before adding or checking oil.

2. Open the oil access cover. Remove and wipe the dipstick with a clean rag.

3. Insert the dipstick into the oil fill without screwing it in. Remove the dipstick to check the oil mark (Fig.6).

If the oil mark covers less than one half of the dipstick, slowly add oil until the oil mark reaches to the top of the dipstick (or when you can see the oil coming halfway up the oil fill threads).

4. Wipe clean any oil leaks and firmly tighten the dipstick. Reinstall the oil access cover.

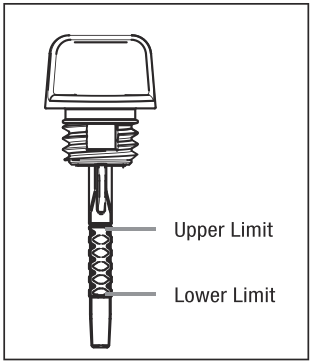

STEP 2 - ADD/CHECK FUEL

⚠ **GASOLINE WARNING:** Keep generator away from open flame. This generator may emit highly flammable and explosive gasoline vapors, which can cause severe burns or even death if ignited. A nearby open flame can lead to explosion even if not directly in contact with gasoline.

- Do not operate near open flame, heat, or any other ignition source.
- Do not smoke near the generator.
- Always operate on a firm, level surface.
- Always turn generator off before refueling. Allow generator to cool for at least 2 minutes before removing the fuel cap. Loosen cap slowly to relieve pressure in tank.
- Do not overfill fuel tank. Fuel may expand during operation. Do not fill to the top of the tank. Allow for expansion.
- Always check for spilled fuel before operating. Clean up any spilled fuel before starting.
- Empty fuel tank before storing or transporting the generator to prevent spilling.

Use ONLY fresh (within 30 days from purchase), lead-free gasoline with a minimum of 87 octane rating. The generator performs best with ethanol-free gasoline. DO NOT use gasoline with over 10% ethanol. The capacity of the fuel tank is 1.6 US gallons (6.0 L) . DO NOT mix oil with gasoline.

NOTICE:

- Never use an oil/gasoline mixture.
- Never use old gasoline.
- Avoid getting dirt or water into the fuel tank.
- Gasoline can age in the tank and make starting difficult. Never store generator for more than 2 months with fuel in the tank.
- Keep gasoline away from sparks, open flames, pilot lights, heat and other sources of ignition.

GENERATOR PREPARATION

To add gasoline, follow these steps:

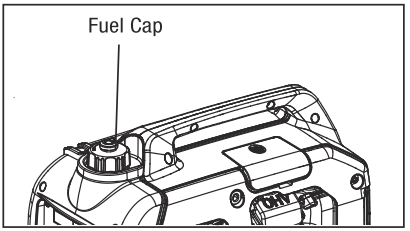

1. Make sure the generator is shut OFF and on a level surface. Unscrew the fuel cap (Fig. 7) and set it aside. The fuel cap may be tight and hard to unscrew.

2. Slowly add unleaded gasoline to the fuel tank. Be careful not to overfill.

NOTE: Do not fill the fuel tank to the very top. If you do so, gasoline will expand and spill during use, even with the fuel cap in place.

3. Reinstall fuel cap and wipe clean any spilled gasoline with a dry cloth.

To check fuel level:

During operation, the fuel level will be displayed on the DATA CENTER of the panel, or check the fuel gauge. If the fuel level is low, refill the fuel tank before starting your generator for the next time.

STEP 3 - GROUND THE GENERATOR

To reduce the risk of electric shock and to maximize safety, the generator should be properly grounded.

Ground the generator by tightening the grounding nut on the front control panel (Fig. 8) against a grounding wire. A generally acceptable grounding wire is a **No. 12 AWG (American Wire Gauge) stranded copper wire.**

This grounding wire should be connected at the other end to a copper, brass, or steel grounding rod that is driven into the earth. Wire and grounding rods are not included with the generator.

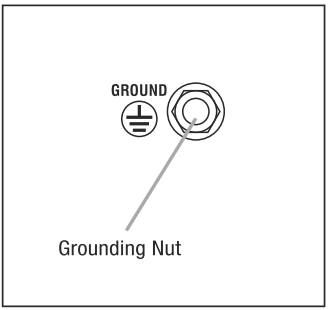

NOTE: Grounding codes can vary by location. Contact a local electrician to check the area codes.

⚠ **WARNING:** Failure to properly ground the generator increases your risk of electric shock.

HIGH ALTITUDE OPERATION ABOVE 3000 FEET

The fuel system on this generator may be affected by operation at high altitudes. Proper operation can be ensured by installing an altitude kit at altitudes higher than 3000 feet above sea level. At elevations above 8000 feet, the engine may experience a decrease in performance, even with the proper altitude kit. Operating this generator without said kit may increase the engine's emissions and decrease both fuel economy and performance. Please contact your authorized service center for important information regarding these modifications.

STARTING THE GENERATOR

Before starting the generator, make sure you have read and performed the steps in the “Generator Preparation” section of this manual. If you are unsure about how to perform any of the steps in this manual Please contact your authorized service center

⚠ DANGER: CARBON MONOXIDE

Using a generator indoors **CAN KILL YOU IN MINUTES.** Generator exhaust contains carbon monoxide (CO). This is a poison gas you cannot see or smell. If you can smell the generator exhaust, you are breathing CO. But even if you cannot smell the exhaust, you could be breathing CO.

NEVER use a generator inside homes, garages, crawl spaces, or other partially enclosed areas. Deadly levels of carbon monoxide can build up in these areas. Using a fan or opening windows and doors does NOT supply enough fresh air. ONLY use a generator OUTSIDE and far away from windows, doors, and vents. These openings can pull in generator exhaust.

Even if you use a generator correctly, CO may leak into the home. ALWAYS use a battery-powered or battery-backup CO alarm in the home. If you start to feel sick, dizzy, or weak after the generator has been running, move to fresh air RIGHT AWAY. See a doctor. You may have carbon monoxide poisoning.

⚠ **WARNING:** The exhaust from this product contains chemicals known to the State of California to cause cancer, birth defects, or other reproductive harm.

⚠ **WARNING:** DO NOT operate generator near open flame or flammable materials This generator may emit highly flammable and explosive gasoline vapors, which can cause severe burns or even death if ignited. A nearby open flame can lead to explosion even if it isn’t directly in contact with gasoline. Do not smoke near the generator.

⚠ **WARNING:** This generator produces powerful voltage, which can result in electrocution.

⚠ **WARNING:** Do not use in rainy or wet conditions. Do not touch bare wires or receptacles (outlets). Do not allow children or non-qualified persons to operate.

⚠ **WARNING:** Generator should ONLY be connected to electrical devices, either directly or with an extension cord. NEVER CONNECT TO A BUILDING ELECTRICAL SYSTEM without a qualified electrician and connected to a transfer switch as a separately derived system. Such connections must comply with local electrical laws and codes. Failure to comply can create a back-feed, which may result in serious injury or death to utility workers.

To maximize safety, ALWAYS ground the generator before using it (see the “GROUND THE GENERATOR” section on page 14).

Use a ground fault circuit interrupter (GFCI) in highly conductive areas such as metal decking or steel work. GFCIs are available in-line with some extension cords.

CAUTION: Disconnect all electrical loads from the generator before attempting to start.

STARTING YOUR GENERATOR

Before starting the generator:

1. Verify that the generator is outside on a dry, level surface. Allow at least two feet of clearance on all sides of the generator.

2. To maximize safety, check that the generator is properly grounded (see “GROUND THE GENERATOR”).

3. Check there is sufficient level of oil in the crankcase. Add oil if necessary (see “ADD/CHECK OIL”).

4. Make sure there is sufficient level of gasoline in the fuel tank. Add fuel if necessary (see “ADD/CHECK FUEL”).

5. Make sure all electrical devices are unplugged from the generator during ignition. Otherwise it will be difficult for the engine to start.

To start the generator, perform the following steps:

1. Turn the LOW IDLE switch to the “OFF” position. (Fig. 9)

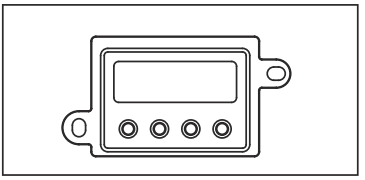

2. Turn the Multi-Switch to the “START” position. (Fig. 10)

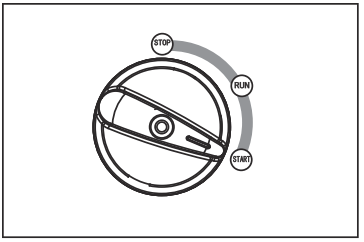

3. Starting the unit, pull recoil handle (starter cord) slowly until resistance is felt, then pull rapidly.(Fig. 11)

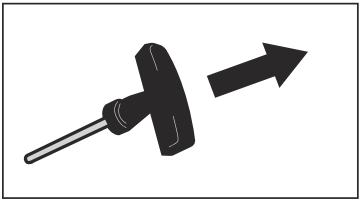

4. Turn the Main switch to the “RUN” position. (Fig. 12)

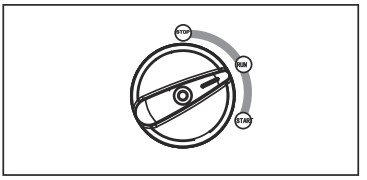

SHUTTING OFF THE GENERATOR (FOR GASOLINE)

⚠ **CAUTION:** Unplugging running devices can cause damage to the generator. Never stop the engine with electrical devices connected and running.

Turn the multifunction switch to the “stop” position

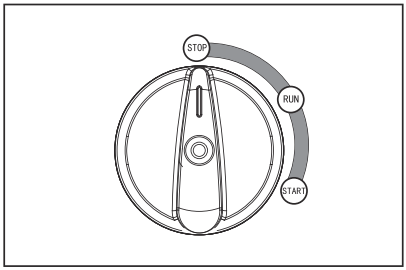

⚠ **WARNING:** Allow the generator to cool down before touching areas that become hot during use.

CAUTION: Allowing gasoline to sit in the fuel tank for long periods of time can make it difficult to start the generator in the future. NEVER store the generator for extended periods of time (over 2 months) with fuel in the fuel tank. Refer to “STORING THE GENERATOR.”

MAINTENANCE

RECOMMENDED MAINTENANCE SCHEDULE

Proper routine maintenance of the generator will help prolong the life of the machine. Please perform maintenance checks and operations according to the Maintenance Schedule. If there are any questions about the maintenance procedures listed in this manual, Please contact your authorized service center.

⚠ **WARNING:**Never perform maintenance operations while the generator is running. Before maintaining or servicing the generator, turn OFF the generator, disconnect all devices and allow the generator to cool down.

Recommended Maintenance Schedule		Each 8 hours or daily	Every 25 hours	Every 3 months or 50 hours	Every 6 months or 100 hours	Before Storage	As necessary
Engine Oil	Check level	x					
	Replace		x*			x	x
Air Filter	Check			x*			
	Clean			x*			
Spark Plug	Check/clean/ regap				x		
	Change					x	x
Fuel Tank	Check level	x					
	Drain					x	x
Carburetor (Auto Shutoff)	Drain					x	x
Carburetor (Manual Shutoff)		x				x	
Spark Arrestor	Check/Clean				x		

* Clean/change more often under dusty conditions or operating under heavy load.

IMPORTANT GENERATOR MAINTENANCE TIPS:

- Drain your carburetor after each use and before storage to prevent it from clogging.
- Do not store the generator with fuel inside the tank for more than 2 months - the fuel will go bad.
- Run the generator for at least 20 minutes every month to charge the battery and maximize the generator's lifespan.

NOTE: Failure to properly maintain the generator will void the warranty.

MAINTENANCE

AIR FILTER MAINTENANCE

Check every 50 hours of operation (refer to Recommended Maintenance Schedule).
Routine maintenance of the air filter helps maintain proper airflow to the carburetor. Occasionally check that the air cleaner is free of excessive dirt.

To inspect and clean the air filter:

1. Unscrew the maintenance cover knob, and remove the cover from the side panel.

2. Take the cover off of the air cleaner (Fig. 14). Remove the sponge-like air filter element from the casing. Wipe excessive oil and any dirt from inside of the air filter casing.

3. Check and clean the foam air filter element. Good elements can be washed in soapy water. Dry the element in clean cloth (do not twist it). Add a few drops of engine oil to the air filter element and spread it evenly.

If the air filter element has been damaged, replace it with a new one. Please contact your authorized service center.

4. Reinstall the air filter element, air filter cover and maintenance cover.

⚠ **WARNING:** Running the engine with a dirty, damaged or missing air filter element can result in danger to the operator and cause the engine to wear out prematurely.

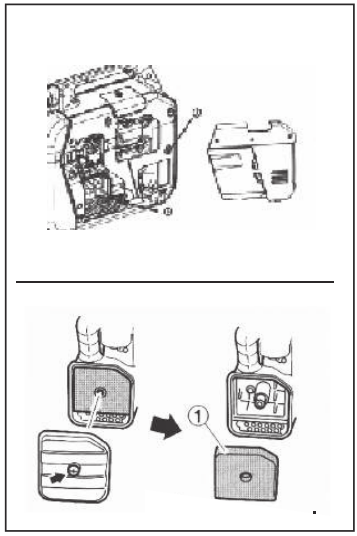

SPARK PLUG MAINTENANCE

Refer to Recommended Maintenance Schedule for maintaining the spark plug.
The spark plug must be properly gapped and free of deposits in order to ensure proper engine operation. If the engine is hot, allow it to cool before servicing the spark plug.

To inspect or replace the spark plug:

1. Unscrew the maintenance cover knob, and remove the cover from the side panel (Fig. 15).

2. Remove the spark plug cap .

3. Use the included spark plug wrench to unscrew and then carefully remove the spark plug from the engine.
TIP: There is limited space for the wrench to turn. Use both rows of holes in the spark plug wrench to gain leverage to loosen the plug.

A - Spark plug
B - Spark plug cap

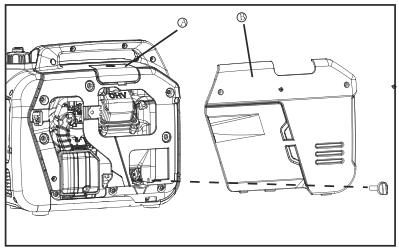

4. Visually inspect the spark plug. If it is cracked or chipped, or if the electrodes are worn or burned, discard it and replace with a new spark plug.

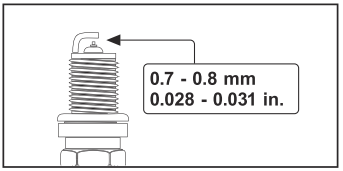

5. If re-using the spark plug, use a wire brush to clean any dirt from around the spark plug base, then re-gap the spark plug.

6. Measure the plug gap with a spark plug gap gauge. The gap should be 0.7 - 0.8 mm (0.028 - 0.031 in) (Fig. 16). Carefully adjust the gap if necessary.

7. Screw the spark plug back into the spark plug hole using the spark plug wrench. Do not over-tighten spark plug. Recommended tightening of spark plug is ½ to ¾ of a turn (15 ft-lb torque/20.33 Nm) after spark plug gasket contacts spark plug hole.

8. Reinstall the spark plug cap and maintenance cover.

SPARK ARRESTOR MAINTENANCE

Inspect and clean the spark arrestor every 100 hours of operation.

The spark arrester is located outside the muffler, which gets very hot during operation. Allow the engine to cool completely before servicing the spark arrester. To inspect and clean the spark arrester:

1. Remove the two screws, and remove the tail pipe and spark arrester.

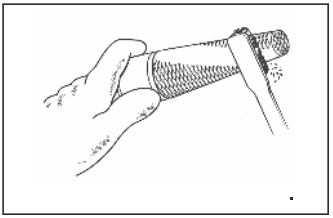

2. Use a brush to remove carbon deposits from the spark arrester screen. Be careful to avoid damaging the screen.

The spark arrester must be free of breaks and tears. Replace the spark arrester if it is damaged.

3.Install the spark arrester in the reverse order of removal.

MAINTENANCE

DRAINING THE FUEL TANK / CARBURETOR

To help prevent gum deposits in the fuel system, drain the fuel from the tank and carburetor before storing.

1. With the help of another person, place the generator on an elevated platform such as a table or desk.

2. Unscrew the maintenance cover knob, and remove the cover from the side panel.

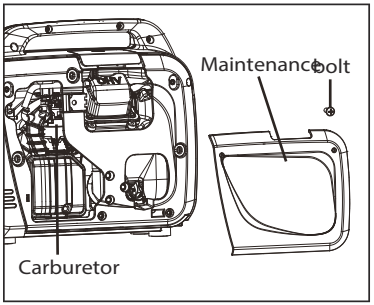

To draining fuel tank:
3. Make sure that the fuel switch to turned to “ON”.

To draining carburetor:
3. Make sure that the fuel switch to turned to “OFF”, at this position, the fuel valve is turned OFF so that only the fuel left inside the carburetor will be drained out.

4. The carburetor can be accessed between the engine and the air filter (Fig. 18). Locate the transparent tube from the carburetor that extends down through the base plate of the generator.

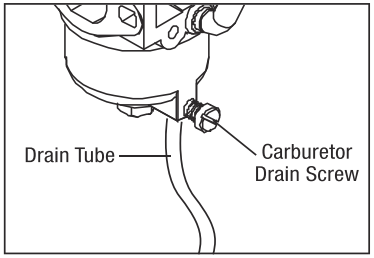

5. Prepare an approved gasoline-storage container and direct the end of the drain tube into the container.

6. Open up the carburetor drain screw (Fig. 19) with a flat-head screwdriver (not included) and drain out any gasoline that has built up inside the carburetor through the drain tube into the approved gasoline-storage container.

7. Once the fuel has drained, tighten the drain screw with the screwdriver.

NOTE: Make sure to drain your carburetor before storing the generator for long periods of time.

8. Reinstall the service panel.

MAINTENANCE

DRAINING/CHANGING OIL

Change the oil according to the Recommended Maintenance Schedule.
Change the oil MORE OFTEN if operating under heavy load or high ambient temperatures. It is also necessary to drain the oil from the crankcase if it has become contaminated with water or dirt. Changing the oil when the engine is warm allows for complete drainage.

To change engine oil:

1. Place the generator on an elevated platform such as table.

NOTE: To avoid possible oil spills from the carburetor bowl, drain the carburetor before draining oil.

2. Unscrew the two cover knobs, and remove the maintenance cover from the side panel (Fig. 20).

3. Place a suitable container underneath the generator to catch the used oil.

4. Remove the oil fill cap/dipstick.

5. Tilt the generator to drain the oil completely.

6. With the generator in a level position and refill with engine oil following the instructions in the Checking/Adding engine oil section previously in this manual.

7. Reinstall the oil dipstick and tighten it securely. Wipe clean any oil spillage and reinstall the maintenance cover.

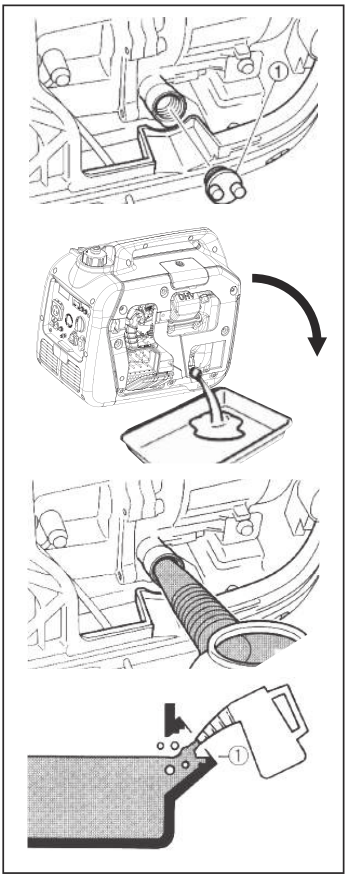

TRANSPORTATION & STORAGE

TRANSPORTING THE GENERATOR

To prevent fuel spillage when transporting, be sure to perform the following:

1. Tighten the fuel cap and turn the vacuum relief valve to “OFF”.
2. Set the engine switch to “OFF”.
3. Drain the fuel tank if possible.
4. Keep the generator upright. Never place the generator on its side or upside down - doing so will make it difficult to start.

⚠ **WARNING:** Avoid direct sunlight inside a vehicle. If the generator is left in an enclosed vehicle for many hours, the high temperature could cause the fuel to vaporize and result in a possible explosion.

STORING THE GENERATOR

Shut off the generator and allow the unit to cool to room temperature before storing it. NEVER place any type of storage cover on the generator while it is still hot. Do not obstruct any ventilation openings.

Follow the procedures below for properly storing your generator. We highly recommend running your generator once a month for 20 to 30 minutes. Plug in a small load in to ensure there is proper power output.

For Short Periods (30 to 60 Days):	**For Extended Periods (Over 60 Days):**
• Drain the carburetor. • Disconnect the negative lead from the battery. • Add fuel stabilizer: Follow the suggested portions and instructions of your preferred stabilizer. Run the engine for 15 to 20 minutes, allowing the fuel stabilizer to mix with the gasoline and circulate through the carburetor, and then top off with fuel. Filling the fuel tank full reduces the amount of air in the tank and helps fight deterioration of fuel.	• Disconnect the negative lead from the battery. • Drain the fuel tank and carburetor (see “DRAINING THE FUEL TANK”). NEVER store generator with fuel in the tank for more than two months. • Change the engine oil (see “CHANGING OIL”).

⚠ **WARNING:** Store the generator upright in a cool and dry location, away from sources of heat, open flames, sparks or pilot lights.

PRODUCT DISPOSAL

Do not dispose of used generator or parts with your household waste. This product contains electrical or electronic components that should be recycled. Please take this product to your local recycling facility for responsible disposal to minimize its environmental impact.

Do not dispose of used oil or fuel in the trash or down a drain. Please contact your local recycling center or auto garage to arrange proper oil/fuel disposal.

TROUBLESHOOTING GUIDE

ENGINE WILL NOT START

Possible Cause	Solution
No fuel.	Fill fuel tank.
Stale gasoline or water in gasoline.	Drain entire system and refill with fresh fuel.
Engine oil level is low.	Engine is equipped with Low Oil Shutoff. If engine oil level is low, it must be filled before unit will start. Check engine oil level and fill, if necessary.
Multi-switch is in OFF position.	Turn multi-switch to the RUN or START position.
Spark plug faulty, fouled, or improperly gapped.	Replace spark plug.
Engine stored without treating or draining gasoline, or refueled with bad gasoline.	Drain fuel. Refuel with fresh gasoline.
Dirty fuel filter.	Replace fuel filter or contact a qualified service center.

ENGINE LACKS POWER.

Possible Cause	Solution
Dirty air filter.	Check air filter element. Clean or replace as needed.
Engine stored without treating or draining gasoline, or refueled with bad gasoline.	Drain fuel. Refuel with fresh gasoline. If problem continues, contact a qualified service center.

AC RECEPTACLE DOES NOT WORK.

Possible Cause	Solution
OUTPUT indicator is OFF, and OVERLOAD indicator is ON.	Check AC load. Stop and restart the engine. Check the cooling air inlet. Stop and restart the engine.
AC Circuit protector(s) tripped.	Check AC load and reset AC circuit protector(s)
GFCI system activated.	Reset the GFCI.
Item plugged in is defective.	Try a different item.

If problem persists after trying the above solutions, contact your nearest authorized service center for assistance.