Dual Fuel Generator Operator's Manual

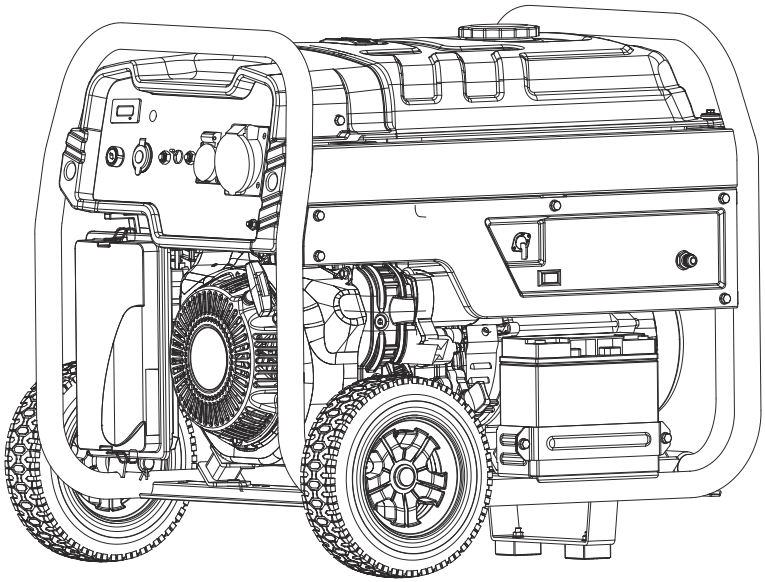

SAVE THIS MANUAL: This manual contains important information regarding safety,operation, maintnance and storage of this product. Before use, read carefully and understand all cautions, warnings, instructions and product labels. Failure to do so could result in serious personal injury and/or property damage.

TABLE OF CONTENTS

Introduction
5 Using the Operators Manual

Safety
6 Safety Rules
6 Hazard Symbols and Meanings

Assembly
12 Assembling the Accessory Kit

Generator Components
13 Component Chart

Preparing the Generator
14 Grounding the Generator

Pre-Operation Checklist
15 Engine Oil
15 Fuel
16 General Recommendations
16 Fuel Type
16 Check Component Parts
17 Check Generator Surroundings

Starting the Generator
17 For Gasoline
20 For LPG

TABLE OF CONTENTS

Operation
22 Using Electric Power
22 AC Application

Stopping the Generator
23 Stopping the Generator
23 Oil Sensor

Maintenance
24 Maintenance Schedule
24 Maintenance
25 Changing Engine Oil
25 Servicing the Air Filter
25 Cleaning and Gapping Spark Plug
25 Cleaning Fuel Strainer
25 Periodic Operation and Inspection
26 Cleaning Spark Arrestor Screen
26 Valve Clearance

Transporting
27 Transporting

Storage
27 Preparation for Storage
28 Storage

Specifications
29 Specifications

Circuit Diagram
30 Circuit Diagram

Warranty
31 Warranty



Attention: Read through the complete manual prior to the initial use of your generator.

Using the Operator's manual

The operating manual is an important part of your generator. It should be read thoroughly before initial use, and referred to often to make sure adequate safety and service concerns are being addressed.

Reading the owner's manual thoroughly will help avoid any personal injury or damage to your machine. By knowing how best to operate this machine you will be better positioned to show others who may also operate the unit.

This manual is written to take you from the safety requirements to the operating functions of your machine. You can refer back to the manual at any time to help troubleshoot any specific operating functions, so store it with the machine at all times.

Save these Instructions

Safety Rules



This is the safety alert symbol. It is used to alert you to potential personal injury hazards. Obey all safety messages that follow this symbol to avoid possible injury or death.

The safety alert symbol (⚠) is used with a signal word (DANGER, CAUTION, WARNING), a symbol and/or a safety message to alert you to hazards.

DANGER indicates a hazard which, if not avoided, will result in death or serious injury.
WARNING indicates a hazard which, if not avoided, could result in death or serious injury.
CAUTION indicates a hazard which, if not avoided, might result in minor or moderate injury.
NOTICE indicates a situation that could result in equipment damage. Follow safety messages to avoid or reduce the risk of injury or death.

Hazard Symbols and Meanings

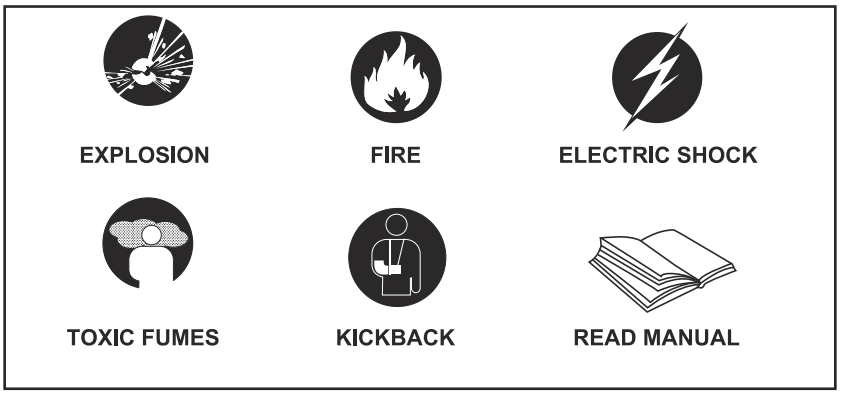

⚠WARNING



Generator exhaust contains carbon monoxide, a poisonous gas that can kill you.

You CANNOT smell or see this gas.

- Use the generator outdoors, away from open windows, vents, or doors that could allow the carbon monoxide gas to come indoors. Keep the generator at least 1 meter (3 feet) away from any structure or building during use.
- NEVER use a generator indoors, including in homes, garages, basements, crawl spaces, and other enclosed or partiallyenclosed areas, even with ventilation. Opening doors and windows or using fans will not prevent carbon monoxide buildup in the home.
- NEVER use a generator in enclosed or partially-enclosed spaces. Generators can produce high levels of carbon monoxide very quickly. When you use a portable generator, remember that you cannot smell or see carbon monoxide. Even if you can't smell exhaust fumes, you may still be exposed to carbon monoxide.
- NEVER operate the generator in an explosive atmosphere, near combustible materials or where ventilation is not sufficient to carry away exhaust fumes. Exhaust fumes can cause serious injury or death.
- If you start to feel sick, dizzy, or weak while using a generator, get to fresh air RIGHT AWAY. DO NOT DELAY. The carbon monoxide from generators can rapidly lead to full incapacitation and death.
- If you experience serious symptoms, get medical attention immediately. Inform medical staff that carbon monoxide poisoning is suspected. If you experienced symptoms while indoors, have someone call the fire department to determine when it is safe to re-enter the building.

⚠WARNING



Starter cord kickback (rapid retraction) will pull hand and arm toward engine faster than you can let go which could cause broken bones, fractures, bruises, or sprains resulting in serious injury.

- When starting the engine, pull cord slowly until resistance is felt and then pull rapidly to avoid kickback.
- NEVER start or stop engine with electrical devices plugged in and turned on.

⚠WARNING



Fuel and its vapors are extremely flammable and explosive.

Fire or explosion can cause severe burns or death.

When Adding or Draining Fuel

- Observe all safety regulations for the safe handling of fuel. Handle fuel in safety containers. If the container does not have a spout, use a funnel.
- Do not overfill the fuel tank, leave room for the fuel to expand.
- Do not refill fuel tank while the engine is running. Before refueling the generator, turn it off and let it cool down. Gasoline spilled on hot engine parts could ignite.
- Fill the tank only on an area of bare ground. While fueling the tank, keep heat, sparks and open flame away. Carefully clean up any spilled fuel before starting engine.
- Always fill fuel tank in an area with plenty of ventilation to avoid inhaling dangerous fumes.
- NEVER store fuel for your generator in the home. Gasoline, propane, kerosene, and other flammable liquids should be stored outside of living areas in properly-labeled, non-glass safety containers. Do not store them near a fuel-burning appliance, such as a natural gas water heater in a garage. If the fuel is spilled or the container is not sealed properly, invisible vapors from the fuel can travel along the ground and can be ignited by the appliance's pilot light or by arcing from electric switches in the appliance.

This product has been designed with internal grounding or floating bonded neutral. If it should malfunction or breakdown, grounding provides a path of least resistance for electric current to reduce the risk of electric shock.

⚠ DANGER



Improper grounding can result in a risk of electrocution. Check with a qualified electrician for your local requirements if you are in doubt as to whether the unit is properly grounded.

- This generator is equipped with a grounding terminal for added protection. Using the ground path from the generator to an external ground source as instructed in the section labeled “Grounding Instructions” in the Preparation section of this manual can be necessary. Please consult a qualified electrician for local regulations.
- The generator is a potential source of electrical shock if not kept dry.
- Keep the generator dry and do not use in rain or wet conditions. To protect from moisture, operate it on a dry surface under an open, canopy-like structure. Dry your hands if wet before touching the generator.
- Plug appliances directly into the generator. Or, use a heavy duty, outdoor-rated extension cord that is rated (in watts or amps) at least equal to the sum of the connected appliance loads. Check that the entire cord is free of cuts or tears and that the plug has all three prongs,especially a grounding pin.
- NEVER try to power the house wiring by plugging the generator into a wall outlet, a practice known as “back feeding”. This is an extremely dangerous practice that presents an electrocution risk to utility workers and neighbors served by the same utility transformer. It also bypasses some of the built-in household circuit protection devices. If you must connect the generator to the house wiring to power appliances, have a qualified electrician install the appropriate equipment in accordance with local electrical codes.

Important Safety Instructions

⚠WARNING	
	To reduce the risk of injury, read this operator's manual completely before using. When using this product, the following basic precautions should always be followed.

- Do not enclose the generator or cover it. The generator may become overheated if it is enclosed. If generator has been covered to protect if from the weather during non use, be sure to remove it and keep it well away from the area during generator use.
- Operate the generator on a level surface. It is not necessary to prepare a special foundation for the generator. However, the generator will vibrate on an irregular surface, so choose a level place. If the generator is tilted or moved during operation, fuel may spill and/or the generator may tip over, causing a hazardous situation. Proper lubrication cannot be expected if the generator is operated on a steep incline or slope. In such a case, piston seizure may occur even if the oil is above the upper level.
- Pay attention to the wiring or extension cords from the generator to the connected device. If the wire is under the generator or in contact with vibrating part, it may break and possibly cause a fire, generator burnout, or electric shock hazard. Replace damaged or worn cords immediately.
- Do not operate in rain, in wet or damp conditions, or with wet hands. The operator may suffer severe electric shock if the generator is wet due to rain or snow. If wet, wipe and dry it well before starting. Do not pour water directly over the generator, nor wash it with water.
- Be extremely careful that all necessary electrical grounding procedures are followed during each and every use. Failure to do so can be fatal.
- DO NOT smoke while charging a battery. The battery emits flammable hydrogen gas, which can explode if exposed to electric arcing or open flame. Keep the area well ventilated and keep open flames / sparks away when charging a battery.
- The engine becomes extremely hot during and for some time after operation. Keep combustible materials well away from generator area. Be very careful not to touch any parts of the hot engine especially the muffler area or serious burns may result.

- Keep children and all bystanders at a safe distance from work area.
- It is absolutely essential that you know the safe and proper use of the power tool or appliance that you intend to use. All operators must read, understand and follow the tool / appliance owners manual. Tool and appliance applications and limitations must be understood. Follow all directions given on labels and warnings. Keep all instruction manuals and literature in a safe place for future reference.
- Always switch off generator's AC circuit breaker and disconnect tools or appliances when not in use, before servicing, adjusting, or installing accessories and attachments.
- Make sure the engine is stopped before starting any maintenance, servicing or repair.

NOTE:

Ensure maintenance and repair of the generator are performed by properly trained personnel only.

SAVE THESE INSTRUCTIONS

ASSEMBLY

Assembling the Accessory Kit

NOTE: The wheels are not intended for over-the-road use.

1. **Installing the wheels**
- Slide the axle through the hole in the center of the wheel.
- Slide a washer onto the axle, then slide the axle into the wheel mounting hole as shown.
- Insert hitch pin to secure.

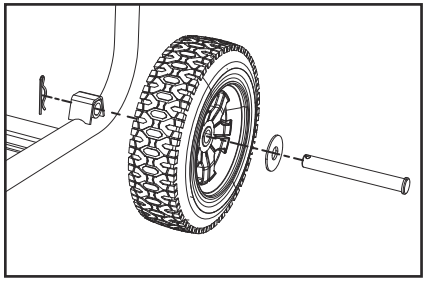

2. **Installing the feet**
- Insert bolts through the foot bracket and holes in the generator frame as shown.
- Thread lock nuts onto bolts and tighten one full turn past snug.

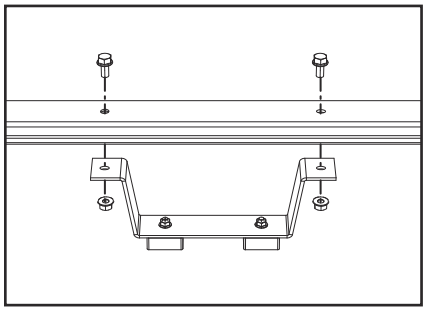

3. **CONNECTING BATTERY**
- Connect the red wires to the positive (+) terminal first, then connect the black wire to the negative (-) terminal. Make sure all connections are tight.
- Cover the terminals with the rubber covers.

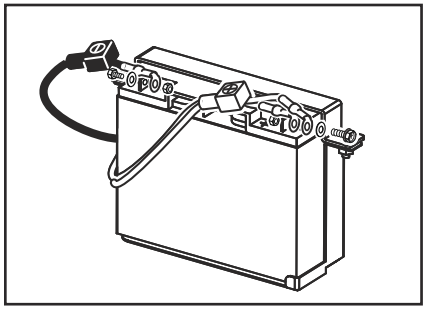

GENERATOR COMPONENTS



Read this operator's manual and safety rules before operating your generator.

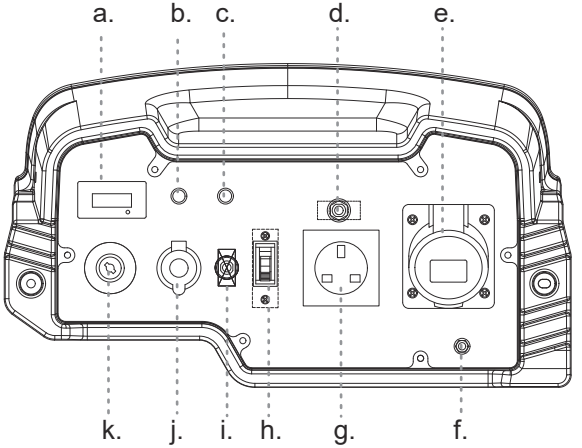

a. Digital Display Meter
b. Power Lamp
c. Oil Alert Lamp
d. AC Circuit Breakers
e. 32A Socket
f. Ground Terminal
g. 13A Socket
h. AC Circuit Breakers
i. DC Circuit Breakers
j. DC 12V
k. Engine Switch

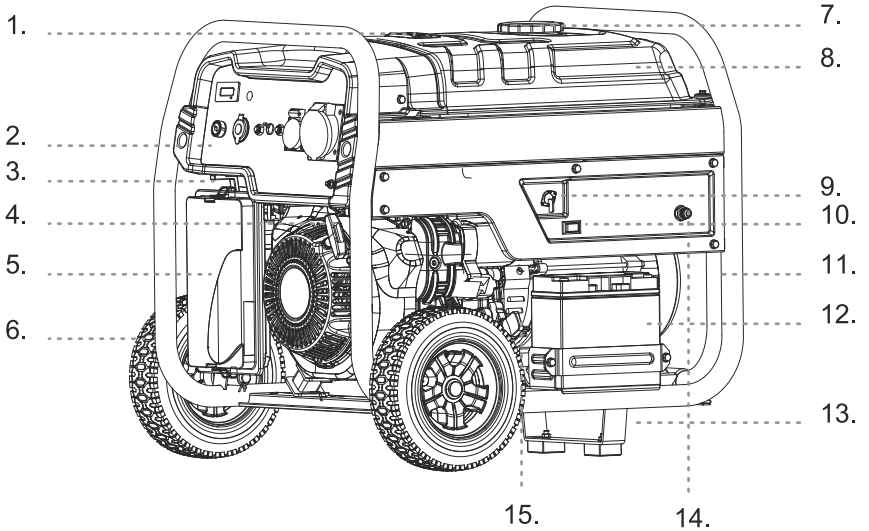

1. Fuel Gauge
2. Control panel
3. Choke Lever
4. Recoil Starter
5. Air Filter
6. Wheel
7. Fuel Tank Cap
8. Fuel Tank
9. Fuel Valve
10. Fuel Source Switch
11. Handle
12. Battery
13. Foot
14. LPG Connector
15. Oil Fill Cap/Dipstick

Grounding Instructions

⚠ DANGER	
	Improper connection of the equipment grounding conductor can result in a risk of electrocution.
Check with a qualified electrician if you are in doubt as to whether the unit is properly grounded for your local regulations.	

The ground terminal on the frame can be used to connect the generator to a suitable ground source. The ground path should be made with #8 size wire. Connect the grounding wire securely to the ground terminal. Connect the other end of the wire securely to a suitable ground source.

A metal underground water pipe in direct contact with the earth for at least 10 feet can be used as a grounding source. If a pipe is unavailable, an 8 foot length of pipe or rod may be used as the ground source. The pipe should be 3/4” diameter or larger and the outer surface must be noncorrosive. If a steel or iron rod is used it should be at least 5/8” diameter and if a nonferrous rod is used it should be at least 1/2” diameter and be listed as material for grounding. Drive the rod or pipe to a depth of 8’. If a rock bottom is encountered less than 4’ down, bury the rod or pipe in a trench. All electrical tools and appliances operated from this generator, must be properly grounded by use of a third wire or be “Double Insulated”.
It is recommended to:

1. Use electrical devices with approved grounded extension cords.
2. Use an extension cord with a 3 hole receptacle and a 3 prong plug at the opposite ends to ensure continuity of the ground protection from the generator to appliance.

We strongly recommend that all applicable regulations relating to grounding specifications be checked and followed.

⚠ WARNING	
	Always check the level of the engine oil prior to starting the generator.
• Failure to do so could cause the engine to seize if the oil is low or empty.	

Engine Oil

Before checking or refilling oil, be sure generator is located on stable and level surface with engine stopped.

1. Remove oil dipstick and check the engine oil level.
2. If oil level is below the lower level line, refill with suitable oil to upper level line. Do not screw in the oil dipstick when checking oil level. Do not over fill.
3. Change oil if contaminated.
4. Check engine oil level before starting each time thereafter.

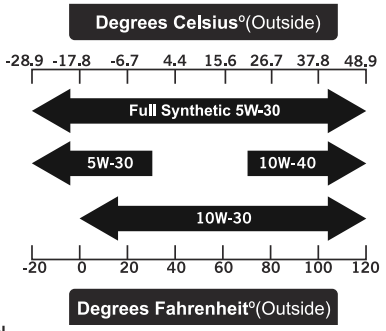

Use no special additives. Select the oil's viscosity grade according to the expected operating temperature (also see chart).

Above 40°F, use SAE 30
Below 40°F and down to 1ºF, use IOW-30
Below 10°F, use synthetic 5W-30

Fueling

⚠WARNING	
	Gasoline is extremely flammable and its vapors can explode if ignited.

- DO NOT refuel while smoking or near open flame or other such potential fire hazards.
- Store gasoline only in approved containers, in well ventilated, unoccupied buildings and away from sparks or flames.
- DO NOT fill the tank while the engine is hot or running, since spilled fuel could ignite if it comes in contact with hot parts or sparks from ignition.
- DO NOT start the engine near spilled fuel.
- N EVER use gasoline as a cleaning agent.

⚠WARNING



DO NOT overfill the tank, leave room for the fuel to expand. If the fuel tank is over filled, fuel can overflow onto a hot engine and cause a FIRE or EXPLOSION. If fuel spills, wait until it evaporates before starting engine. Check fuel lines, tank, cap and fittings frequently for cracks or leaks. Replace if necessary.

1. If fuel level is low, refill with unleaded automotive gasoline.
2. Check fuel gauge while filling.
3. When using the generator for the first time or stopping due to the fuel running out, pull the recoil handle several times after filling the tank.

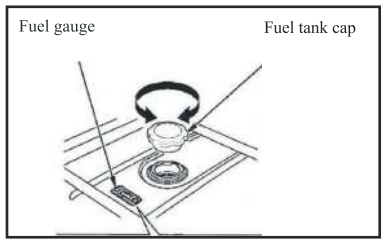

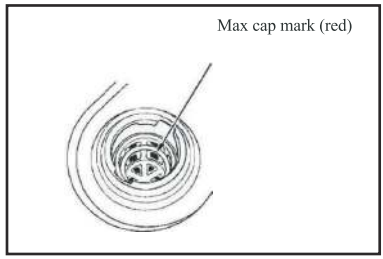

General Recommendations

- Purchase gasoline in small quantities and store in clean, approved containers.
- To minimize gum deposits in your fuel system and to insure easy starting, do not use gasoline left over from the previous season.
- Do not add oil to the gasoline.
- Consider adding fuel stabilizer before running or starting the generator.

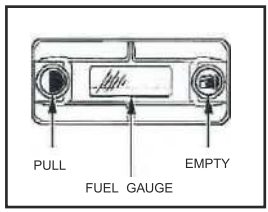

Fuel Type

- For best results use only clean, fresh, unleaded gasoline. Do not use any fuel with more than 10% added ethanol, and never use E85 fuel.
- Do not mix oil with gasoline.

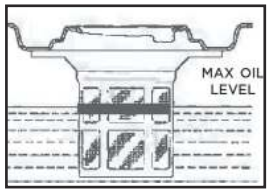

Check Component Parts

Check following items before starting engine:

1. Fuel leakage from fuel hose, etc.
2. Bolts and nuts for looseness.
3. Components for damage or breakage.
4. Generator not resting on or against any adjacent wiring.

⚠WARNING	
	Keep area clear of flammables or other hazardous materials.

- Keep generator at least 3ft (1m) away from buildings or other structures. Keep at least 5ft (152cm) of clearance on all sides of generator including overhead.
- Only operate generators in a dry, well ventilated area.
- Keep exhaust pipe clear of foreign objects.
- Keep generator away from open flame. No Smoking!
- Keep generator on a stable and level surface.
- Do not block generator air vents with paper or other material.
- Do not touch hot part and avoid hot exhaust gases.
- Contact the original equipment manufacturer, retailer, or dealer to obtain a spark arrester designed for the exhaust system installed on this engine.
- Replacement parts must be the same and installed in the same position as the original parts.

STARTING YOUR GENERATOR

1-1. For Gasoline

When using gasoline, Turn the fuel source switch to the “GAS” position and turn the fuel valve to the “ON” position

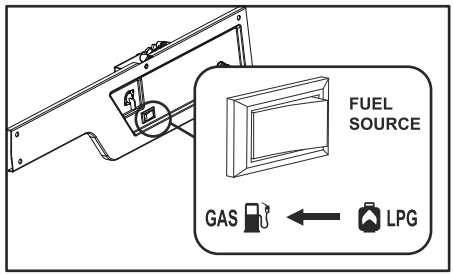

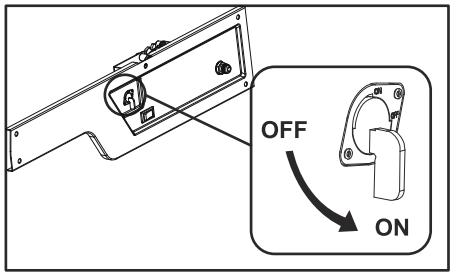

Recoil Start

⚠ CAUTION

When starting the engine with the recoil start, set the toggle switch in the “ON” position before pulling the starter handle.

1. Make sure all appliances are disconnected from the generator.

2. Move engine choke lever to the “START” position.

3. For recoil start, firmly grasp the recoil handle and pull slowly until increased resistance is felt. Pull rapidly up and away.

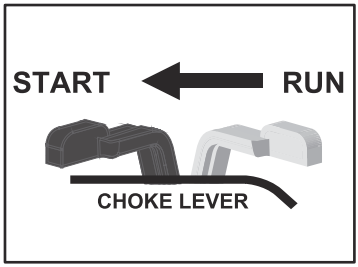

4. When engine starts, move choke lever to 1/2-CHOKE position until engine runs smoothly and then fully into “RUN” position. If engine falters, move choke back out to 1/2-CHOKE position until engine runs smoothly and then fully into “ON” position.

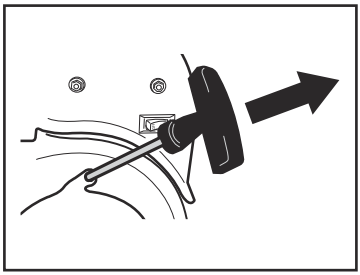

NOTICE

If engine fires, but does not continue to run, move choke lever to the “START” position and repeat starting instructions.

NOTICE

If engine fails to start after 3 pulls, or if unit shuts down during operation, make sure unit is on a level surface and check for proper oil level in crankcase. This unit may be equipped with a low oil protection device. If so, oil must be checked at proper level for engine to start and run.

Electric Start

1. Make sure all appliances are disconnected from the generator.
2. Turn the choke lever to the "START" position. (When the engine is warm or temperature is high, start engine with the choke lever in the "RUN" position).
3. Set the engine switch to the middle "ON" position. Press and hold the toggle to the "START" position to engage the starter. Release, set switch to the "ON" position when engine is running.

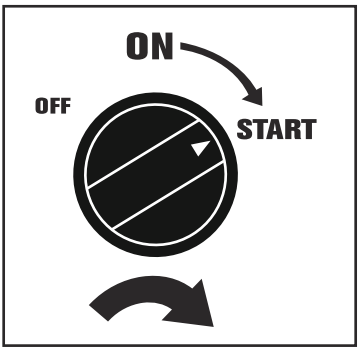

To prolong the life of starter components, DO NOT hold switch in "START" position for more than 15 seconds, and pause for at least 1 minute between starting attempts.

⚠ CAUTION

Do not connect appliances with defective power cords and/or plugs.

- Be sure appliances are not connected to generator when starting up. Starting the generator with an appliance connected could result in damage to the generator and/or appliances and personal injury.
- DO NOT turn the starting motor over 5 seconds continuously. If the engine fails to start, return the engine switch to the "ON" position and wait about 10 seconds and then start again.
- DO NOT press the engine switch to the "START" position when the engine is running to prevent damage of starting motor.

⚠ CAUTION

- Do not overload the generator.
- Do not overload individual panel receptacles. These outlets are protected against overload with push-to-reset-type circuit breakers. If amperage rating of any circuit breaker is exceeded, that breaker opens and the electrical output to that receptacle is lost.

1-2. For LPG

- Connect the LPG gas hose to the propane fuel source.

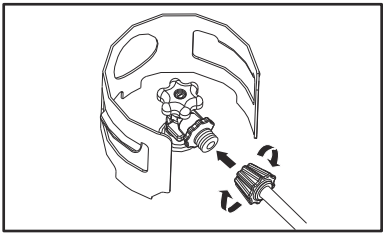

- Connect the small end of the LPG gas hose to the LPG regulator on the generator and then snug with a wrench to prevent leakage.

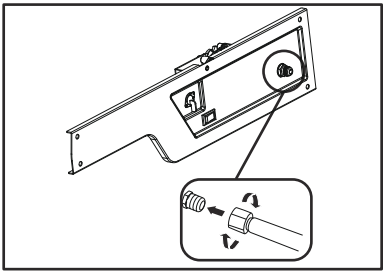

- Turn the fuel source switch to the “LPG” position.

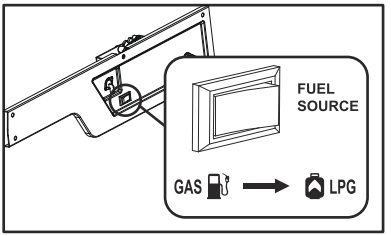

- Rotate the LPG valve to open the LPG.

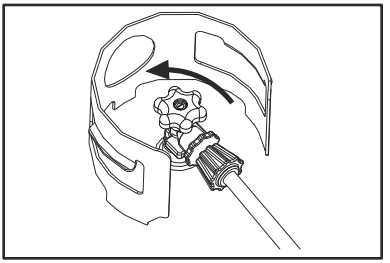

Recoil Start

⚠ CAUTION

When starting the engine with the recoil start, set the toggle switch in the “ON” position before pulling the starter handle.

1. Make sure all appliances are disconnected from the generator.

2. For recoil start, firmly grasp the recoil handle and pull slowly until increased resistance is felt. Pull rapidly up and away.

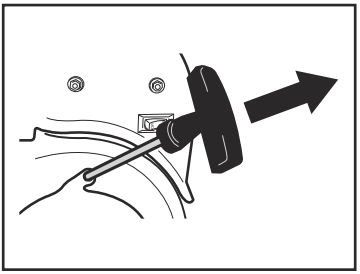

NOTICE

If engine fails to start after 3 pulls, or if unit shuts down during operation, make sure unit is on a level surface and check for proper oil level in crankcase. This unit may be equipped with a low oil protection device. If so, oil must be checked at proper level for engine to start and run.

Electric Start

1. Make sure all appliances are disconnected from the generator.
2. Set the engine switch to the middle “ON” position. Press and hold the toggle to the “START” position to engage the starter. Release, set switch to the “ON” position when engine is running.

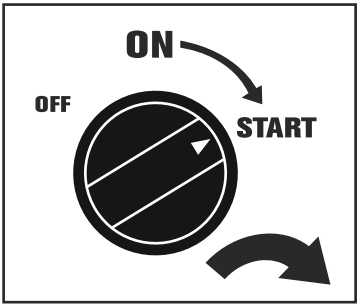

To prolong the life of starter components, DO NOT hold switch in “START” position for more than 15 seconds, and pause for at least 1 minute between starting attempts.

Using Electric Power

⚠WARNING	
	Risk of electrocution. Make sure that the appliance is switched off before connecting it to the generator.
• DO NOT move the generator while it is running.	

Connecting Electrical Loads

1. Let engine run stable and warm up for a few minutes after starting.
2. Plug in and turn on the electrical loads.

NOTICE

- Start generator and let engine stabilize before connecting electrical loads. Connect electrical loads in OFF position then turn ON for operation.
- Turn electrical loads OFF and disconnect from generator before stopping generator.

NOTICE

DO NOT exceed the generator's wattage/amperage capacity. Exceeding generators wattage/amperage capacity could damage generator and/or electrical devices connected to it.

Wattage Information

Some appliances need a "surge" of energy when starting. This means that the amount of electrical power needed to start the appliance may exceed the amount needed to maintain its use. Electrical appliances and tools normally come with a label indicating voltage, cycles / Hz, amperage (amps) and electrical power needed to run the appliance or tool.
Check with your nearest dealer or service provider with questions regarding power surge of certain appliances or power tools.

- Electrical loads such as incandescent lamps and hot plates require the same wattage to start as is needed to maintain use.
- Loads such as fluorescent lamps require 1.2 to 2 times the indicated wattage during start-up.
- Loads for mercury lamps require 2 to 3 times the indicated wattage during start-up.
- Electrical motors require a large starting current. Power requirements depend on the type of motor and its use. Once enough "surge" is attained to start the motor, the appliance will require only 30% to 50% of the wattage to continue running.

- Most electrical tools require 1.2 to 3 times their wattage for running under load during use. For example, a 5000 watt generator can power a 1800 to 4000 watt electrical tool.
- Loads such as submersible pumps and air compressors require a very large force to start. They need 3 to 5 times the normal running wattage in order to start. For example, a 5000 watt generator would only be able to drive a 1000 to 7000 watt pump.

⚠ CAUTION

If an electric motor fails to start or reach running speed, turn off the appliance or tool immediately to avoid equipment damage. Always check the requirements of the tool or appliance being used compared to the rated output of the generator.

Stopping The Generator

1. Turn off the power switch of the electric equipment and unplug the cord from receptacle of the generator.
2. Allow the engine several minutes to cool down and to stabilize the internal temperatures of the engine and generator before stopping.
3. Push the engine switch to the OFF position.

Oil Sensor

The oil sensor detects a drop in oil level in the crankcase and automatically stops the engine when the oil level drops below a predetermined level.

The engine is equipped with a low oil level sensor that shuts down the engine automatically when the oil level drops below a specified level. If the engine shuts down by itself and the fuel tank has enough gasoline, check the engine oil level.

⚠ CAUTION

DO NOT remove oil sensor probe when refilling with oil. Remove oil filler cap on the opposite side of carburetor.

High Altitude

At altitudes over 5,000 feet (1524 meters), a minimum 85 octane / 85 (89 RON) of gasoline is acceptable. For the emissions to be compliant, a high altitude adjustment is required. Operation without this adjustment will cause decreased performance, increased fuel consumption, and increased emissions. See an authorized dealer for high altitude adjustment information. Operation of the engine at altitudes below 2,500 feet (762 meters) with the high altitude kit is not recommended.

Maintenance Schedule

⚠ CAUTION

Make sure the engine is stopped before starting any maintenance, servicing or repair.

NOTE: It is recommended to use ear protection when performing operation, maintenance and repair of the generator. Maintenance, replacement or repair of the emission control devices and systems must be performed by an authorized service provider.

First 5 hours: change engine oil.
Every 8 hours or daily: clean debris, check engine oil level.
Every 25 hours or yearly: clean engine air filter.
Every 50 hours or yearly: change engine oil.
Yearly: replace engine air filter, service fuel valve, service spark plug, inspect muffler and spark arrester, clean cooling system.

Generator Maintenance
Generator maintenance consists of keeping the unit clean and dry. Operate and store the unit in a clean dry environment where it will not be exposed to excessive dust, dirt, moisture or any corrosive vapors. Cooling air slots in the generator must not become clogged with snow, leaves, or any other foreign material. Check the cleanliness of the generator frequently and clean when dust, dirt, oil, moisture or other foreign substances are visible on its exterior surface.

⚠ CAUTION

Never insert any object or tool though the air cooling slots, even if the engine is not running.

⚠ WARNING

DO NOT use a garden hose to clean generator. Water can enter the engine fuel system and cause problems. In addition, if water enters the generator though cooling air slots, some water will be retained in voids and crevices of the rotor and stator winding insulation. Water and dirt buildup on the generator internal windings will eventually decrease the insulation resistance of these windings.

⚠ DANGER

When working on the generator, always disconnect spark plug wire from spark plug and keep wire away from spark plug.

Changing Engine Oil
Change oil after the first 8 hours of operation. Thereafter it should be changed every 50 hours.
1. Drain oil by removing the drain plug and the oil filler cap while the engine is warm.
2. Reinstall the drain plug and fill the engine with oil until it reaches the upper level on the oil filler cap.
3. Dispose of used oil according to local zoning or environmental regulations.

Servicing The Air Filter
Maintaining the air filter in proper condition is very important. Dirt induced through improperly installed, improperly serviced or inadequate elements damages and wears out engines. Always keep the element clean. Never run the generator without the air filter.
1. Remove air filter cover.
2. Wash in soapy water. Squeeze filter dry in clean cloth (do not twist).
3. You may wish to drop a bit of engine-oil to avoid ice blockage during winter season.
4. Clean air filter cover before re-installing it.

Cleaning and Gapping Spark Plug
If the plug is contaminated with carbon, remove the carbon using a plug cleaner or wire brush. **Use F6TC, BPR4ES or Champion RN14YC.**

- Adjust the electrode gap to 0.70 to 0.80 mm (0.028-0.031 in).
- Install the correctly gapped spark plug into the cylinder head and torque to 15 ft/lbs.

Cleaning Fuel Strainer
Dirt and water in the fuel are removed by the fuel strainer.
1. Remove the strainer cup and throw away water and dirt.
2. Clean the screen and strainer cup with gasoline.
3. Tightly fasten the cup to main body, making sure to avoid fuel leak.

Periodic Operation and Inspection :
When using the generator as emergency electric power source, periodic operation and inspection are needed.
Fuel (gasoline) and engine oil will deteriorate with time, and cause the engine to be difficult to start and result in improper engine operation and /or failure.

⚠ CAUTION

Since the fuel (gasoline) will deteriorate with time, replace fuel (gasoline) with fresh fuel periodically; every three months or add a fuel stabilizer.

Spark Arrester

The spark arrester must be cleaned regularly to keep it functioning as designed. A clogged spark arrester:

- Prevents the flow of exhaust gas
- Reduces engine output
- Increases fuel consumption
- Makes starting difficult

⚠ CAUTION

If engine has been running, the muffler and the spark arrester will be very hot. Allow the muffler to cool before cleaning the spark arrester.

Clean The Spark Arrester Screen

1. Shut off generator and allow the engine and muffler to cool down completely before servicing spark arrestor (located on the back of the muffler).
2. Remove the clamp and spark arrestor screen.
3. Clean the spark arrestor screen with a small wire brush.
4. Replace the spark arrestor if it is damaged.
5. Installation of the spark arrestor screen is the reverse of the removal.

Valve Clearance

After the first 50 hours of operation, check the valve clearance in the engine and adjust if necessary.

Important: If feeling uncomfortable about doing this procedure or the proper tools are not available, please take the generator to the nearest service center to have the valve clearance adjusted. This is a very important step to ensure longest life for the engine.

Transporting

When transporting the generator, make sure that the fuel (gasoline) is drained from the tank.

⚠WARNING	
	To prevent fuel spillage due to the vibration and impact, never transport the generator with fuel (gasoline) in the tank. Secure the tank cap. To avoid the risk of the gasoline flammability, never leave the generator in an area exposed to direct sunlight or high temperatures for a long period time.
Keep the fuel in an approved storage tank when transporting.	

1. Turn the engine switch to the STOP position.
2. Drain the fuel from the tank.
3. Tighten the tank cap.

⚠CAUTION
DO NOT place any heavy objects on the generator. Select and place the generator in the proper position of the transport vehicle so that the generator will not move or fall down. Secure the generator if necessary.

Preparation for Storage

The generator should be started at least once every seven days and be allowed to run at least 30 minutes. If this cannot be done and the unit must be stored for more than 30 days, use the following information as a guide to prepare it for storage:

1. Drain fuel from fuel tank carefully by disconnecting the fuel line. Gasoline left in the fuel tank will eventually deteriorate making engine starting difficult. Add fuel stabilizer to fuel tank.
2. Remove the drain screw of the carburetor.
3. Change engine oil.
4. Check for loose bolts and screws, tighten them if necessary.
5. Clean generator thoroughly with clean cloth. NEVER USE WATER TO CLEAN GENERATOR.
6. Pull recoil starter handle until resistance is felt, leaving handle in that position.
7. Store generator in a well ventilated, low humidity area.

- Do not store gasoline from one season to another.
- Replace the gasoline can if it starts to rust. Rust and/or dirt in the gasoline will cause problems with the carburetor and fuel system.
- If possible, store the unit indoors and cover it to give protection from dust and dirt. BE SURE TO EMPTY THE FUEL TANK.

⚠ DANGER

NEVER store engine with fuel in tank indoors or in enclosed, poorly ventilated areas where fumes may reach an open flame, spark or pilot light as on a furnace, water heater, clothes dryer or other gas appliance. Drain fuel into approved container outdoors, away from open flame. Be sure engine is cool. Do not smoke.

⚠ CAUTION

Avoid spray from spark plug holes when cranking engine.

- If it is not practical to empty the fuel tank and the unit is to be stored for some time, use a commercially available fuel stabilizer added to the gasoline to increase the life of the gasoline.
- Cover the unit with a suitable protective cover that does not retain moisture.

It is important to avoid gum deposits from forming in essential fuel system parts such as the carburetor, fuel hose or tank during storage. Also, experience indicates that alcohol-blended fuels (gasohol, ethanol or methanol) can attract moisture, which leads to separation and formation of acids storage. Acidic gas can damage the fuel system of an engine while in storage. To avoid engine problems, the fuel system should be emptied before storage of 30 days or longer, as follows:

1. Remove all gasoline from the fuel tank.
2. Start and run engine until engine stops from lack of fuel.
3. While engine is still warm, drain oil from crankcase. Refill with recommended grade.
4. Remove spark plugs and pour about 1/2 ounce (15 ml) of engine oil the cylinders. Cover spark plug hole with rag. Pull the recoil starter a couple times to lubricate the piston rings and cylinder bore.
5. Install and tighten spark plugs. Do not connect spark plug wires.
6. Clean the generator outer surfaces. Check that cooling air slots and openings on generator are open and unobstructed.
7. Store the unit in clean, dry place.
8. Do not store gasoline from one season to another.
9. Replace the gasoline can if it start to rust. Rust and/or dirt in the gasoline will cause problems with the carburetor and fuel system.
10. If possible, store the unit indoors and cover it to give protection from dust and dirt. BE SURE TO EMPTY THE FUEL TANK.
11. If it is not practical to empty the fuel tank and the unit is to be stored for some time, use a commercially available fuel stabilizer added to the gasoline to increase the life of the gasoline.
12. Cover the unit with a suitable protective cover that does not retain moisture.

SPECIFICATIONS

Model	XL8000-DFV
Frequency	50Hz
Rated power	7200W(Gas.)/6800W(LPG)
Max. power	7800W(Gas.)/7200W(LPG)
AC Voltage	230V
Phase	Single
Fuel capacity	25L
Oil capacity	1.0L
Run time@100% load	5.0h
Engine model	SC460L
Displacement	459cc
Max. output	16.0HP/3600rpm
Start system	Recoil/E-start


EXCEL
POWER
GENERATORS